## PANEL 'SES'

TYPE: CUTTLER HAMMER PRL4B OR EQUAL
SERVICE: 208/ 120 V, 3ph, 4w
POLES: 24
LOCATION: OUTSIDE AIRGLOW BLDG
SURFACE: x FLUSH

BUS AMPACITY: 800A
MAINS: 800A MCB 100% RATED
NEUTRAL: FULL
AIC: 22kA
NEMA 1 NEMA 3R x

UNLESS OTHERWISE NOTED, SIZE CONDUITS PER NEC, BASE ON TYPE THWN/XHHW

| CKT. KVA A | CKT. KVA B | CKT. KVA C | CB TRIP | COND | WIRE | LOAD NAME | POLE | POLE | LOAD NAME | WIRE | COND | CB TRIP | CKT. KVA A | CKT. KVA B | CKT. KVA C |
|---|---|---|---|---|---|---|---|---|---|---|---|---|---|---|---|
| 38.1 | | | 400 | 4" | #500 | PANEL MSB | 1 | 2 | PANEL SB | #350 | 4" | 400 | 38.3 | | |
| | 38.5 | | | | | | 3 | 4 | | | | | | 38.0 | |
| | | 37.2 | 3 | | | | 5 | 6 | | | | 3 | | | 35.4 |
| 18.7 | | | 150 | 4" | #3/0 | PANEL FB | 7 | 8 | AIRSTACK CHILLER | #1/0 | 2" | 175 | 21.0 | | |
| | 18.7 | | 2 | | | | 9 | 10 | | | | | | 21.0 | |
| | | 0.5 | 60 | 1" | #6 | AIRGLOW BUILDING | 11 | 12 | | | | 3 | | | 21.0 |
| 0.5 | | | 2 | | | | 13 | 14 | BUSSED SPACE | | | | | | |
| | | | | | | BUSSED SPACE | 15 | 16 | | | | | | | |
| | | | | | | | 17 | 18 | | | | | | | |
| | | | | | | | 19 | 20 | | | | | | | |
| | | | | | | | 21 | 22 | | | | | | | |
| | | | | | | | 23 | 24 | | | | | | | |
| 56.1 | 56.0 | 36.5 | TOTAL CONNECTED KVA | | | | | | | | | | 54.5 | 54.2 | 51.6 |

| Load Summary Per NEC Art 220 | A | B | C |
|---|---|---|---|
| Continuous KVA @ 125% | 0.0 | 0.0 | 0.0 |
| Non-Continuous KVAD (DF@Right) | 116.6 | 116.2 | 94.0 |
| Motor KVA @ 25% | 0.0 | 0.0 | 0.0 |
| Total Phase KVA Per NEC | 116.6 | 116.2 | 94.0 |
| Total Phase Amps Per NEC | 971 | 968 | 784 |
| Total KVA Load Per NEC | | 326.82 | |

DEMAND FACTORS AS NOTED
1. 220-11 (Lighting)
2. 220-13 (Recept)
3. 220-15 (Heat)
4. 220-20 (Kitchens)
5. 220-21 (Non-Coincident)
6. 220-34 (Schools)
7. 220-35 (Exist. Bldg.)
8. 550-22 (Mobile Park)
9. 551-44 (RV Parks)
10. 630-11 (Welders)

## PANEL 'SB'

TYPE: CUTTLER HAMMER PRL1A OR EQUAL
SERVICE: 208/ 120 V, 3ph, 4w
POLES: 30
LOCATION: AIRGLOW BLDG
SURFACE: x FLUSH

BUS AMPACITY: 400A
MAINS: 400A MCB
NEUTRAL: FULL
AIC: 22kA
NEMA 1 X NEMA 3R

UNLESS OTHERWISE NOTED, SIZE CONDUITS PER NEC, BASE ON TYPE THWN/XHHW

| CKT. KVA A | CKT. KVA B | CKT. KVA C | CB TRIP | COND | WIRE | LOAD NAME | POLE | POLE | LOAD NAME | WIRE | COND | CB TRIP | CKT. KVA A | CKT. KVA B | CKT. KVA C |
|---|---|---|---|---|---|---|---|---|---|---|---|---|---|---|---|
| 25.8 | | | 225 | 4" | #4/0 | PANEL DB-1 | 1 | 2 | PANEL FA | #3/0 | 4" | 200 | 12.5 | | |
| | 25.5 | | | | | | 3 | 4 | | | | | | 12.5 | |
| | | 22.9 | 3 | | | | 5 | 6 | | | | 3 | | | 12.5 |
| | | | | | | BUSSED SPACE | 7 | 8 | BUSSED SPACE | | | | | | |
| | | | | | | | 9 | 10 | | | | | | | |
| | | | | | | | 11 | 12 | | | | | | | |
| | | | | | | | 13 | 14 | | | | | | | |
| | | | | | | | 15 | 16 | | | | | | | |
| | | | | | | | 17 | 18 | | | | | | | |
| | | | | | | | 19 | 20 | | | | | | | |
| | | | | | | | 21 | 22 | | | | | | | |
| | | | | | | | 23 | 24 | | | | | | | |
| | | | | | | | 25 | 26 | | | | | | | |
| | | | | | | | 27 | 28 | | | | | | | |
| | | | | | | | 29 | 30 | | | | | | | |
| 21.0 | 20.7 | 18.1 | TOTAL CONNECTED KVA | | | | | | | | | | 12.5 | 12.5 | 12.5 |

| Load Summary Per NEC Art 220 | A | B | C |
|---|---|---|---|
| Continuous KVA @ 125% | 0.0 | 0.0 | 0.0 |
| Non-Continuous KVAD (DF@Right) | 38.3 | 38.0 | 35.4 |
| Motor KVA @ 25% | 0.0 | 0.0 | 0.0 |
| Total Phase KVA Per NEC | 38.3 | 38.0 | 35.4 |
| Total Phase Amps Per NEC | 319 | 316 | 295 |
| Total KVA Load Per NEC | | 111.61 | |

DEMAND FACTORS AS NOTED
1. 220-11 (Lighting)
2. 220-13 (Recept)
3. 220-15 (Heat)
4. 220-20 (Kitchens)
5. 220-21 (Non-Coincident)
6. 220-34 (Schools)
7. 220-35 (Exist. Bldg.)
8. 550-22 (Mobile Park)
9. 551-44 (RV Parks)
10. 630-11 (Welders)

## KEYNOTES

1. PANEL 'SES' TO BE LISTED AND LABELED AS SERVICE ENTRANCE EQUIPMENT.

## GENERAL NOTES

1. REFERENCE DRAWING E001 FOR ELECTRICAL SYMBOLS, ABBREVIATIONS, AND GENERAL NOTES.
2. REFERENCE DRAWING EP701 FOR ONE LINE DIAGRAM.
3. EXISTING INSTALLATION SHOWN LIGHT. NEW SHOWN BOLD.
4. CONTRACTOR TO CONFIRM PRESENCE & SIZE OF BREAKER FOR UPGRADED AIRSTACK CHILLER. PROVIDE NEW BREAKER IF NEEDED.

ENRICO B. LAOS
LICENSED PROFESSIONAL ENGINEER
No. 11778-E
HAWAII U.S.A.

THIS WORK WAS PREPARED BY ME OR UNDER MY SUPERVISION AND CONSTRUCTION OF THIS PROJECT WILL BE UNDER MY OBSERVATION.

SIGNATURE 04/10/2012 EXPIRATION DATE OF LICENSE 04/30/2014

# Pan-STARRS PS2 Lure Modifications
# University of Hawaii (PHASE 4)

MAUI, HALEAKALA, HAWAII


2051 W. SUNSET RD. SUITE NO. 101
TUCSON, ARIZONA 85704
TEL. (520) 293-1488
FAX (520) 293-8349
WWW.M3ENG.COM
ARCHITECTURE ENGINEERING CONSTRUCTION MANAGEMENT


## Revisions

| | Description | Date |
|---|---|---|
| 1 | CLIENT COMMENTS | 04-10-12 |
| 2 | | |
| 3 | | |
| 4 | | |
| 5 | | |
| 6 | | |

Drawn: PP
Checked: EBL
Issue Date: 04-04-11

Drawing Title: ELECTRICAL PANEL SCHEDULES SHEET 2

Sheet Number: EP602

M3PN 100064

Last Update: 4.10.2012


File: P:\2010\100064\Electrical\Drawings\EP602.dwg LAST UPDATE: AUG 12, 2011 @ 3:51 PM BY: pp1731 LAST REV: PLOT SCALE: 1:1

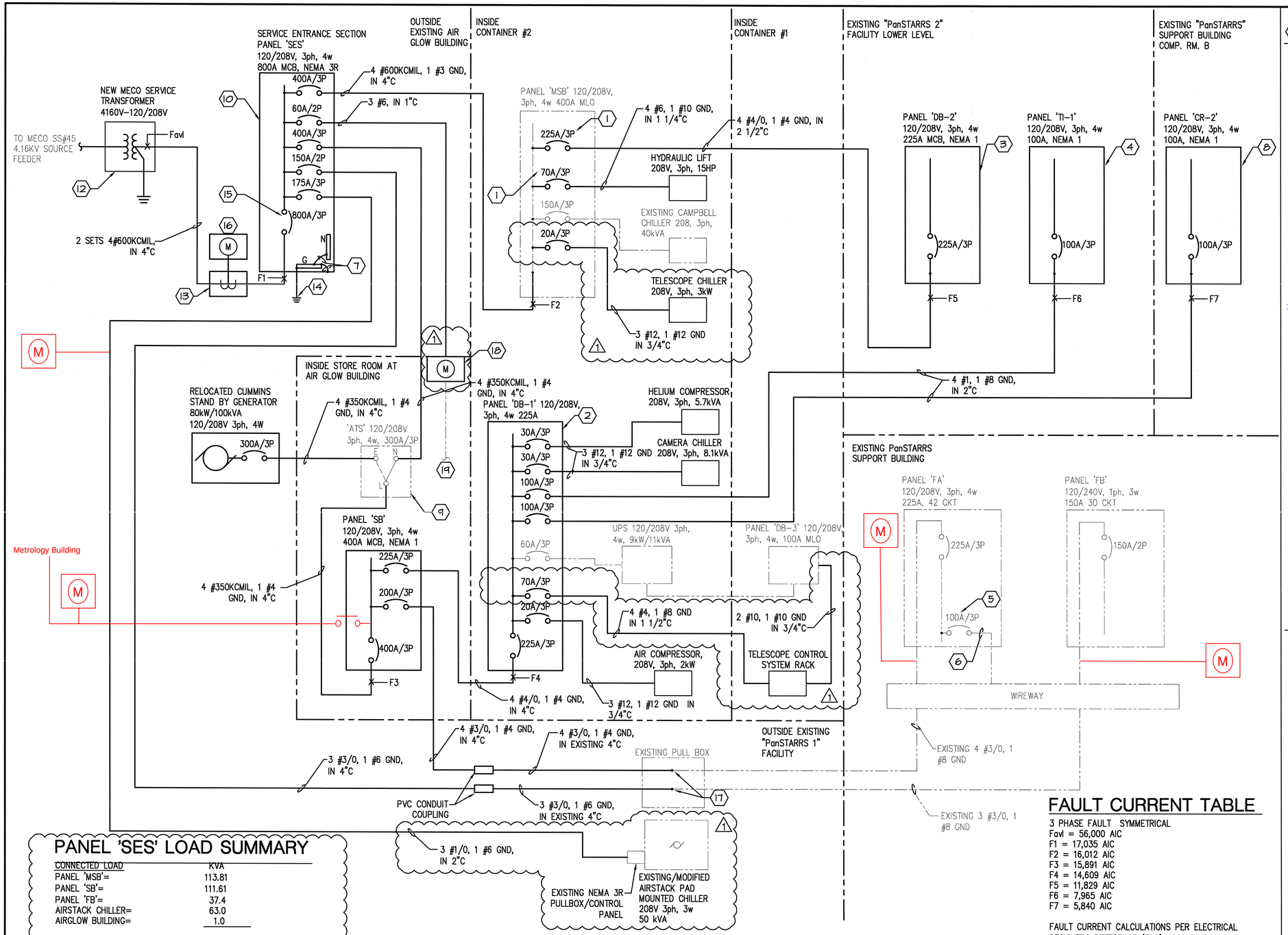


## PANEL 'SES' LOAD SUMMARY

| CONNECTED LOAD | KVA |
|---|---|
| PANEL 'MSB'= | 113.81 |
| PANEL 'SB'= | 111.61 |
| PANEL 'FB'= | 37.4 |
| AIRSTACK CHILLER= | 63.0 |
| AIRGLOW BUILDING= | 1.0 |
| TOTAL CONNECTED LOAD= | 308.82 kVA |
| NON–COINCIDENTAL LOADS: | |
| FC–01 AND FC–02= | 4.4 |
| HYDRAULIC LIFT= | 16.6 |
| ROLL–UP DOORS= | 3.6 |
| LOUVERS= | 0.2 |
| * CAMPBELL CHILLER= | 50.0 |
| TOTAL NON–COINCIDENTAL LOADS= | 74.8 kVA |
| TOTAL CONNECTED LOAD= | 308.82 |
| TOTAL NON–COINCIDENTAL LOADS= | 74.80 |
| TOTAL REVISED LOAD= | 234.02 kVA |

234.02kVA / 208V * $\sqrt{3}$ = 649 A

* BACK–UP LOAD PER CLIENT ON 04/06/12

## CUMMINS STAND BY GENERATOR LOAD SUMMARY

| CONNECTED LOAD | KVA |
|---|---|
| PANEL 'FA'= | 37.5 |
| PANEL 'DB–1'= | 59.8 |
| TOTAL CONNECTED LOAD= | 97.3 kVA |

97.3kVA / 208V * $\sqrt{3}$ = 270 A

CUMMINS STAND BY GENERATOR CAPACITY= 100kVA

## ELECTRICAL ONE LINE DIAGRAM

NOT TO SCALE

## FAULT CURRENT TABLE

3 PHASE FAULT SYMMETRICAL
Favl = 56,000 AIC
F1 = 17,035 AIC
F2 = 16,012 AIC
F3 = 15,891 AIC
F4 = 14,609 AIC
F5 = 11,829 AIC
F6 = 7,965 AIC
F7 = 5,840 AIC

FAULT CURRENT CALCULATIONS PER ELECTRICAL DESIGNERS REFERENCE (EDR) 2008 EDITION

## KEYNOTES

1. INSTALL NEW OFCI CIRCUIT BREAKER.
2. REPLACE EXISTING PANEL 'DB-1' WITH NEW OFCI PANEL. TRANSFER EXISTING CIRCUIT BREAKERS AND WIRING TO NEW PANEL 'DB-1'.
3. INSTALL OFCI PANEL 'DB-2'. SEE PANEL SCHEDULE FOR BRANCH CIRCUITS, SHEET EP601.
4. INSTALL OFCI PANEL 'TI-1' FOR TELESCOPE INSTRUMENTATION.
5. LABEL EXISTING AIRSTACK CHILLER CIRCUIT BREAKER AS SPARE.
6. DISCONNECT EXISTING AIRSTACK CHILLER FEEDER CONDUCTORS FROM EXISTING AIRSTACK CHILLER CIRCUIT BREAKER AND REMOVE FEEDER CONDUCTORS FROM PANEL 'FA' TO AIRSTACK CHILLER PULL BOX/CONTROL PANEL.
7. PROVIDE MAIN BUILDING JUMPER, 1 #3/0.
8. INSTALL OFCI PANEL 'CR-2' FOR NEW COMPUTER RACK SERVING 'PS-2'.
9. RELOCATED AUTOMATIC TRANSFER SWITCH 'ATS'.
10. PROVIDE 800A ELECTRICAL SERVICE ENTRANCE PANEL 'SES'.
11. NOT USED.
12. NEW/UPGRADED PAD MOUNTED MAUI ELECTRIC COMPANY (MECO) SERVICE TRANSFORMER.
13. PROVIDE 800A CT CABINET, NEMA 3R PER MECO METERING REQUIREMENTS.
14. PROVIDE 1 #3/0 GROUNDING ELECTRODE CONDUCTOR FROM PANEL 'SES' TO EXISTING PS-1/2 GROUNDING ELECTRODE SYSTEM (GES, SEE SHEET EG101).
15. PROVIDE 100% RATED MAIN CIRCUIT BREAKER.
16. PROVIDE UTILITY REVENUE METER ENCLOSURE NEMA 3R AND METER LOCATED AT ELECTRICAL SERVICE ENTRANCE SECTION.
17. PROVIDE WATER PROOF TYPE SPLICES BETWEEN PANEL 'FA' AND PANEL 'FB' EXISTING AND NEW FEEDERS.
18. PROVIED SINGLE PHASE, 208V, THREE WIRE, CUSTOMER SUB-METER, IN NEMA 3R ENCLOSURE.
19. EXISTING 120/208V, SINGLE PHASE, 3 WIRE FEEDER TO EXISTING AIRGLOW BUILDING SUB-PANEL.

## GENERAL NOTES

1. REFERENCE DRAWING E001 FOR ELECTRICAL SYMBOLS, ABBREVIATIONS, GENERAL NOTES.
2. REFERENCE DRAWINGS EP101 AND EP102 FOR ELECTRICAL POWER PLAN.
3. REFERENCE DRAWINGS EP601 AND EP602 FOR PANEL SCHEDULES.
4. REFERENCE DRAWING ES101 FOR ELECTRICAL SITE PLAN.
5. EXISTING ELECTRICAL EQUIPMENT SHOWN LIGHT. NEW ELECTRICAL EQUIPMENT SHOWN BOLD.
6. ALL FEEDER AND GROUNDING CONDUCTORS ARE COPPER, UON.

ENRICO B. LAOS LICENSED PROFESSIONAL ENGINEER No. 11778-E HAWAII USA

THIS WORK WAS PREPARED BY ME OR UNDER MY SUPERVISION AND CONSTRUCTION OF THIS PROJECT WILL BE UNDER MY OBSERVATION.

SIGNATURE 04/10/2012

EXPIRATION DATE OF LICENSE 04/30/2014

# Pan-STARRS PS2 Lure Modifications
## University of Hawaii (PHASE 4)

HAWAII

MAUI, HALEAKALA,


2051 W. SUNSET RD.
SUITE NO. 101
TUCSON, ARIZONA 85704
TEL. (520) 293-1468
FAX (520) 293-4349
WWW.M3ENG.COM

ARCHITECTURE
ENGINEERING
CONSTRUCTION MANAGEMENT


### Revisions

| Description | Date |
|---|---|
| 1 CLIENT COMMENTS | 04-10-12 |
| 2 | |
| 3 | |
| 4 | |
| 5 | |
| 6 | |

Drawn: PP
Checked: EBL
Issue Date: 04–04–11

Drawing Title: ELECTRICAL ONE LINE DIAGRAM

Sheet Number: EP701

M3PN 100064

Last Update: 4.10.2012


File: P:\2010\100064\Electrical\Drawings\EP701.dwg LAST UPDATE: AUG 12, 2011 @ 3:51 PM BY: pp1731 LAST REV: PLOT SCALE: 1:1

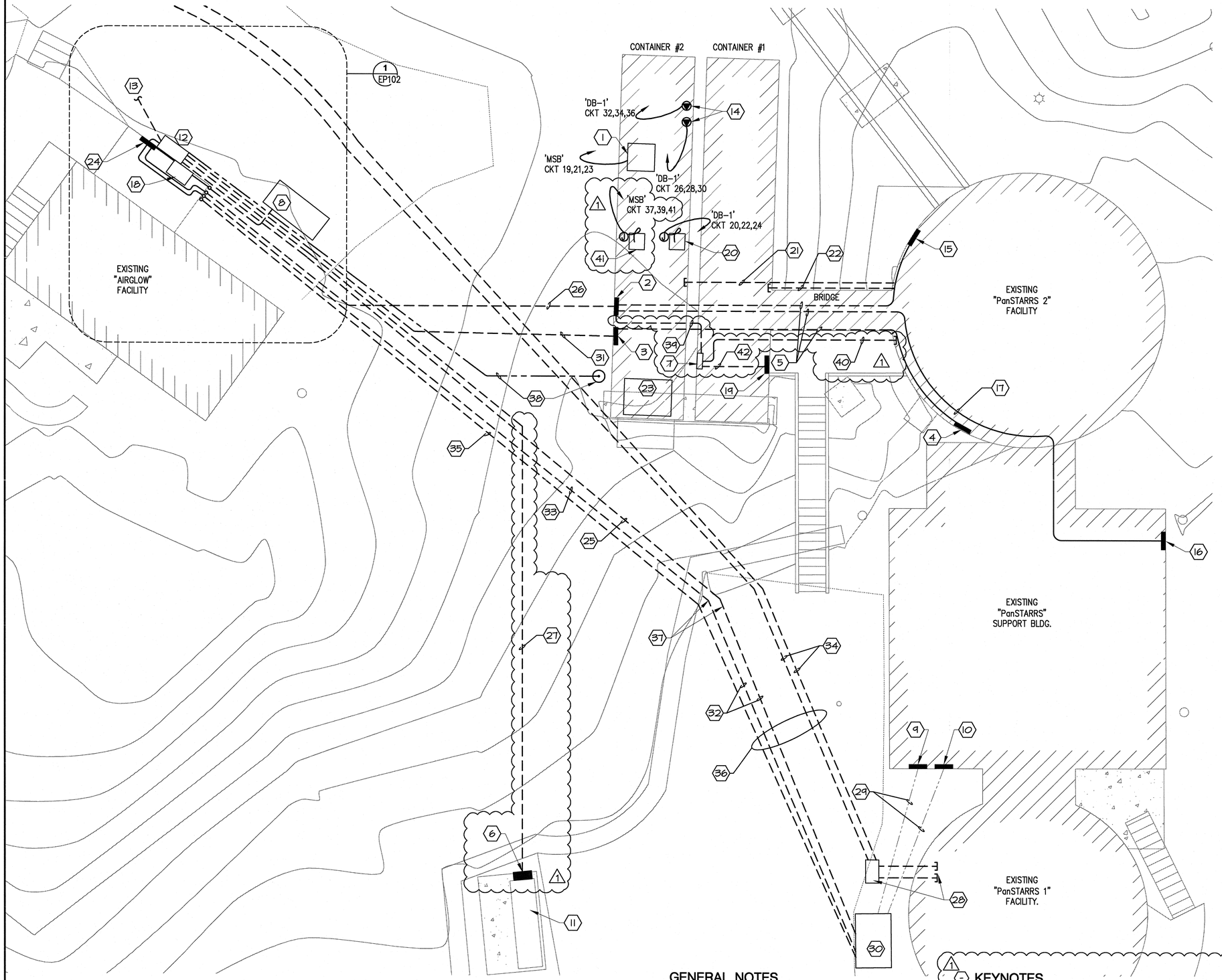


## ELECTRICAL SITE PLAN
SCALE: 3/16" = 1'-0"

## GENERAL NOTES

1. REFERENCE DRAWING E001 FOR ELECTRICAL SYMBOLWS, ABBREVIATIONS AND GENERAL NOTES.
2. VERIFY AND COORDINATE WITH OWNER EXACT LOCATION AND ROUTES OF ALL CONDUITS PRIOR TO INSTALLATION.
3. ALL EXISTING UNDERGROUND AND ABOVE GROUND UTILITIES LOCATIONS SHOWN ARE APPROXIMATE. PRIOR TO ANY EXCAVATION, CONTRACTOR SHALL CALL HAWAII ONE-CALL (411) FOR TONING AND EXACT LOCATIONS OF ALL UNDERGROUND UTILITIES.

## KEYNOTES

1. LOCATION OF NEW HYDRAULIC UNIT FOR THE 5 TON LIFT.
2. INSTALL OWNER PROVIDED PANEL 'DB-1'. INSTALL & WIRE BREAKERS.
3. EXISTING PANEL 'MSB'.
4. INSTALL OWNER PROVIDED PANEL 'DB-2'.
5. ROUTE CONDUIT BELOW CONTAINER AND ROUTE UNDER THE FLOOR OF THE EXISTING WALKWAY INTO THE BUILDING. VERIFY LOCATION. SEE ONE LINE DIAGRAM FOR FEEDER AND CONDUIT SIZE, SHEET EP701. SEE PSTD-820-001 FOR CONDUIT LAYOUT BELOW WALKWAY.
6. EXISTING NEMA 3R AIRSTACK CHILLER PULLBOX/CONTROL PANEL.
7. TELESCOPE CONTROL SYSTEM RACK PROVIDED BY OWNER. (1)
8. LOCATION OF OWNER FURNISHED, CONTRACTOR INSTALLED 80kW CUMMINS STAND BY GENERATOR. VERIFY EXACT LOCATION WITH OWNER.
9. EXISTING PS1 PANEL 'FB'. SHOWN FOR REFERENCE ONLY.
10. EXISTING PS1 PANEL 'FA'. SHOWN FOR REFERENCE ONLY.
11. EXISTING/MODIFIED AIRSTACK PAD MOUNTED CHILLER.
12. LOCATION OF PS-2 ELECTRICAL SERVICE ENTRANCE SECTION PANEL 'SES' AND UTILITY REVENUE METER.
13. UNDERGROUND CONDUITS FOR SERVICE ENTRANCE LATERAL. REFERENCE SHEET EP102 FOR ROUTE AND CONDUIT SIZES.
14. RECEPTACLES FOR HE COMP. AND CAM CHILLER. VERIFY WITH OWNER EXACT NEMA TYPE AND LOCATION OF RECEPTACLES PRIOR TO INSTALLATION.
15. INSTALL OWNER PROVIDED PANEL 'TI-1'.
16. INSTALL OWNER PROVIDED PANEL 'CR-2.
17. ROUTE CONDUIT AT INTERIOR OF BUILDING. VERIFY LOCATION AND ROUTING OF CONDUIT IN THE FIELD WITH THE OWNER.
18. RELOCATED 300A/3P AUTOMATIC TRANSFER SWITCH (ATS).
19. EXISTING PANEL DB-3.
20. AIR COMPRESSOR PROVIDED BY OWNER. VERIFY EXACT ROUGH IN LOCATION WITH OWNER.
21. PROVIDE ONE (1) 1"C FROM CONTAINER #2 TO PanSTARRS 2 FACILITY LOWER LEVEL FOR ETHERNET CONNECTIONS BY OWNER. VERIFY WITH OWNER EXACT LOCATION OF CONDUIT PRIOR TO INSTALLATION.
22. PROVIDE ONE (1) 1"C FROM CONTAINER #1 TO PanSTARRS 2 FACILITY LOWER LEVEL FOR ETHERNET CONNECTIONS BY OWNER. VERIFY WITH OWNER EXACT LOCATION OF CONDUIT PRIOR TO INSTALLATION.
23. EXISTING CAMPBELL CHILLER.
24. INSTALL OWNER PROVIDED PANEL 'SB'.
25. PROVIDE ONE (1) 4" UNDERGROUND CONDUIT FROM PANEL 'SES' AND COUPLE WITH EXISTING 4" CONDUIT FOR PS-1 PANEL 'FB' NEW FEEDER.
26. PROVIDE ONE (1) 4" UNDERGROUND CONDUIT FROM PANEL 'SB' TO PANEL 'DB-1'.
27. PROVIDE ONE (1) 2" UNDERGROUND CONDUIT FROM PANEL 'SES' TO EXISTING PS1 PULL BOX FOR EXISTING/MODIFIED AIRSTACK PAD MOUNTED CHILLER NEW FEEDER. TRENCH WITH CARE IN THE PARKING LOT TO AVOID DAMAGING EXISTING UNDERGROUND UTILITIES/CONDUITS.
28. COMMUNICATION PULLBOX AND TWO (2) UNDERGROUND CONDUITS TO PanSTARRS 1 (PS1) BY OTHERS.
29. PS-1 PANEL 'FA' AND PANEL 'FB' EXISTING FEEDERS IN EXISTING UNDERGROUND CONDUITS TO REMAIN. VERIFY LOCATION.
30. EXISTING PS1 PULL BOX, PROVIDE WATER PROOF TYPE SPLICES BETWEEN PS-1 PANEL 'FA' AND PANEL 'FB' EXISTING AND NEW FEEDERS.
31. PROVIDE ONE (1) 4" UNDERGROUND CONDUIT FROM PANEL 'SES' TO EXISTING PANEL 'MSB'.
32. EXISTING TWO (2) 4" UNDERGROUND EMPTY CONDUITS. UTILIZE CONDUITS FOR PS1 PANEL 'FA' AND PANEL 'FB' NEW FEEDERS. COUPLE CONDUITS TO NEW 4" CONDUITS.
33. PROVIDE ONE (1) 4" UNDERGROUND CONDUIT FROM PANEL 'SB' AND COUPLE WITH EXISTING 4" CONDUIT FOR PS-1 PANEL 'FA' NEW FEEDER.
34. FIBER OPTIC AND COMMUNICATION UNDERGROUND CONDUITS BY OTHERS.
35. PROVIDE ONE (1) 4" UNDERGROUND SPARE CONDUIT TO EXISTING PS1 PULLBOX. STUB-UP CONDUIT OUTSIDE AIRGLOW BUILDING AND CAP FOR FUTURE USE.
36. EXERCISE CAUTION WHEN EXCAVATING IN THE PARKING LOT AREA TO AVOID DAMAGING EXISTING UNDERGROUND UTILITIES/CONDUITS.
37. POINT OF CONNECTION BETWEEN NEW AND EXISTING CONDUITS. FIELD VERIFY LOCATION.
38. PROVIDE 1 #3/0 GROUNDING ELECTRODE CONDUCTOR FROM PANEL 'SES' TO EXISTING PS-1/2 GROUNDING ELECTRODE SYSTEM. VERIFY LOCATION OF GROUNDING ELECTRODE SYSTEM PRIOR TO INSTALLATION.

(1)
## KEYNOTES

39. PROVIDE ONE (1) 1 1/2" CONDUIT FROM PANEL 'DB-1' WITH BRANCH CIRCUITS 37,39,41 TO SERVE TELESCOPE CONTROL SYSTEM RACK.
40. PROVIDE CONDUITS FROM TELESCOPE CONTROL SYSTEM RACK TO PS2 ENCLOSURE. VERIFY WITH OWNER NUMBER OF CONDUITS, SIZE AND EXACT ROUTING LOCATIONS.
41. TELESCOPE CHILLER PROVIDED BY OWNER. VERIFY EXACT ROUGH IN LOCATION WITH OWNER.
41. PROVIDE ONE (1) 3/4" CONDUIT FROM PANEL 'DB-3' TO TELESCOPE CONTROL SYSTEM RACK.

ENRICO B. LAOS
LICENSED PROFESSIONAL ENGINEER
No. 11778-E
HAWAII U.S.A.

**THIS WORK WAS PREPARED BY ME OR UNDER MY SUPERVISION AND CONSTRUCTION OF THIS PROJECT WILL BE UNDER MY OBSERVATION.**

SIGNATURE 04/10/2012

04/30/2014
EXPIRATION DATE OF LICENSE

# Pan-STARRS PS2 Lure Modifications
# University of Hawaii (PHASE 4)
HAWAII
MAUI, HALEAKALA,


2051 W. SUNSET RD.
SUITE NO. 101
TUCSON, ARIZONA 85704
TEL. (520) 293-1488
FAX (520) 293-8349
WWW.M3ENG.COM
ARCHITECTURE
ENGINEERING
CONSTRUCTION MANAGEMENT


## Revisions

| | Description | Date |
|---|---|---|
| 1 | CLIENT COMMENTS | 04-10-12 |
| 2 | | |
| 3 | | |
| 4 | | |
| 5 | | |
| 6 | | |

Drawn: PP
Checked: EBL
Issue Date: 04-04-11

Drawing Title
ELECTRICAL SITE PLAN

Sheet Number
ES101

M3PN 100064

Last Update: 4.10.2012

File: P:\2010\100064\Electrical\Drawings\ES101.dwg LAST UPDATE: AUG 12, 2011 @ 3:51 PM BY: pp1731 LAST REV: PLOT SCALE: 1:1

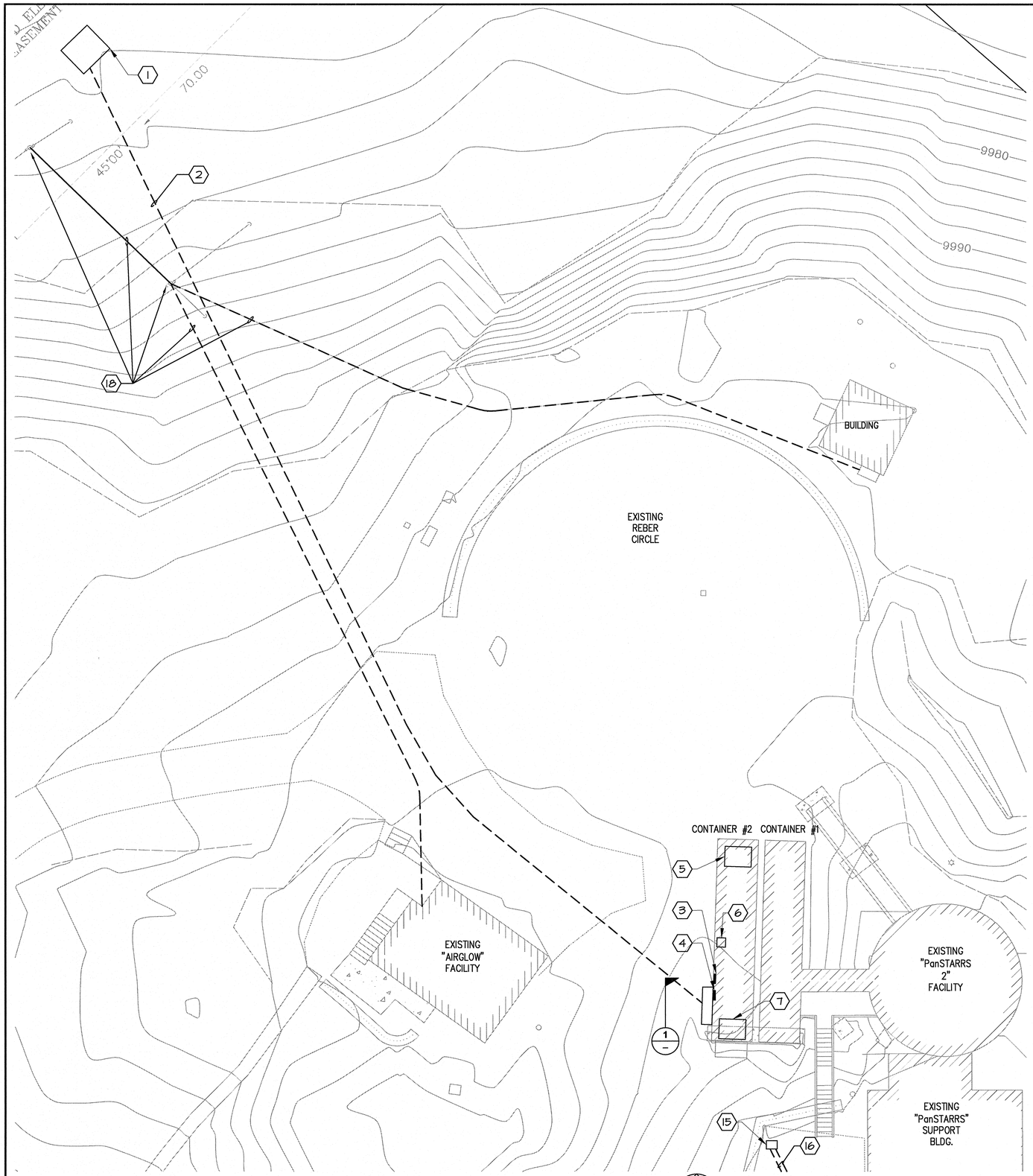


ELECTRICAL SITE DEMOLITION PLAN
SCALE: 3/32" = 1'-0"

NORTH

THIS DRAWING IS GIVEN FOR REFERENCE ONLY, IT CONTAINS NO PHASE 4 TASKS

## GENERAL NOTES

1. REFERENCE DRAWING E001 FOR ELECTRICAL SYMBOLS, ABBREVIATIONS AND GENERAL NOTES.
2. COORDINATE ALL DEMOLITION OF EXISTING PS-2 ELECTRICAL SERVICE WITH Pan-STARRS AND MECO PRIOR TO EXECUTION OF ANY DEMOLITION WORK.
3. ALL EXISTING UNDERGROUND AND ABOVE GROUND UTILITIES LOCATIONS SHOWN ARE APPROXIMATE. PRIOR TO ANY EXCAVATION, CONTRACTOR SHALL CALL HAWAII ONE-CALL (411) FOR TONING AND EXACT LOCATIONS OF ALL UNDERGROUND UTILITIES.

## KEYNOTES

1. CONTRACTOR TO COORDINATE REMOVAL OF EXISTING 112.5kVA SERVICE TRANSFORMER WITH MECO LOCATED NEAR AEOS.
2. DISCONNECT EXISTING PS-2 UNDERGROUND SERVICE LATERAL CONDUCTORS. COORDINATE REMOVAL OF THE OLD LATERAL CONDUCTORS IF NEEDED.
3. REMOVE EXISTING PANEL 'DB-1' AND ITS FEEDER BACK TO 100A/3P DISCONNECT SWITCH LOCATED AT SERVICE ENTRANCE SECTION. VERIFY LOCATION OF FEEDER AND CONDUIT PRIOR TO DEMOLITION.
4. EXISTING PANEL 'MSB' TO REMAIN.
5. EXISTING 35kW STAND BY DIESEL ENGINE/GENERATOR TO BE REMOVED BY OWNER.
6. REMOVE AND RELOCATE EXISTING 300A/3P AUTOMATIC TRANSFER SWITCH (ATS). REFER TO DRAWING EP102 FOR ATS NEW LOCATION.
7. EXISTING CAMPBELL CHILLER TO REMAIN.
8. REMOVE EXISTING ELECTRICAL SERVICE ENTRANCE PULL BOX.
9. REMOVE EXISTING MECO UTILITY METERING. COORDINATE WITH MECO PRIOR TO DEMOLITION.
10. REMOVE EXISTING MECO UTILITY METERING CT CABINET. COORDINATE WITH MECO PRIOR TO DEMOLITION.
11. REMOVE EXISTING SERVICE ENTRANCE WIREWAY.
12. REMOVE EXISTING 400A/30 DISCONNECT SWITCH SERVING PANEL 'MSB'.
13. REMOVE EXISTING 100A/3P DISCONNECT SWITCH SERVING PANEL 'DB-1'.
14. REMOVE EXISTING PANEL 'MSB' FEEDER BACK TO PANEL.
15. REMOVE EXISTING NEMA 3R JUNCTION BOX, VERTICAL SECTION OF CONDUIT AND ELBOW BELOW GRADE.
16. EXISTING TWO (2) 4" CONDUITS TO REMAIN.
17. REMOVE EXISTING COMBINATION METER/PANEL.
18. EXISTING UNDERGROUND AND OVERHEAD MECO AND SERVICE ENTRANCE LATERALS TO BE REMOVED BY OWNER (UH/IFA). COORDINATE REMOVAL WITH OWNER; HOWEVER, EXERCISE CAUTION WHEN EXCAVATING AND REMOVAL OF EXISTING PS-2 SERVICE LATERAL.

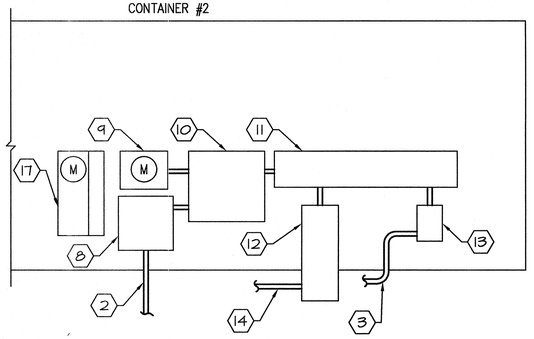


EXISTING ELECTRICAL SERVICE ENTRANCE DEMOLITION SECTION
NOT TO SCALE
1

ENRICO B. LAOS
LICENSED PROFESSIONAL ENGINEER
No. 11778-E
HAWAII U.S.A.

THIS WORK WAS PREPARED BY ME OR UNDER MY SUPERVISION AND CONSTRUCTION OF THIS PROJECT WILL BE UNDER MY OBSERVATION.

SIGNATURE 08/12/11

04/30/2012
EXPIRATION DATE OF LICENSE

# Pan-STARRS PS2 Lure Modifications University of Hawaii (PHASE 4)

MAUI, HALEAKALA, HAWAII


ARCHITECTURE
ENGINEERING
CONSTRUCTION MANAGEMENT
2051 W. SUNSET RD.
SUITE NO. 101
TUCSON, ARIZONA 85704
TEL. (520) 293-1488
FAX (520) 293-8349
WWW.M3ENG.COM


## Revisions

| Description | Date |
|---|---|
| 1 | |
| 2 | |
| 3 | |
| 4 | |
| 5 | |
| 6 | |

Drawn: PP
Checked: EBL
Issue Date: 04-04-11

Drawing Title
ELECTRICAL SITE DEMOLITION PLAN

Sheet Number
ESD101

M3PN 100064

Last Update: 8.12.2011

File: P:\2010\100064\Electrical\Drawings\ESD101.dwg LAST UPDATE: AUG 12, 2011 @ 3:51 PM BY: pp1731 LAST REV: PLOT SCALE: 1:1

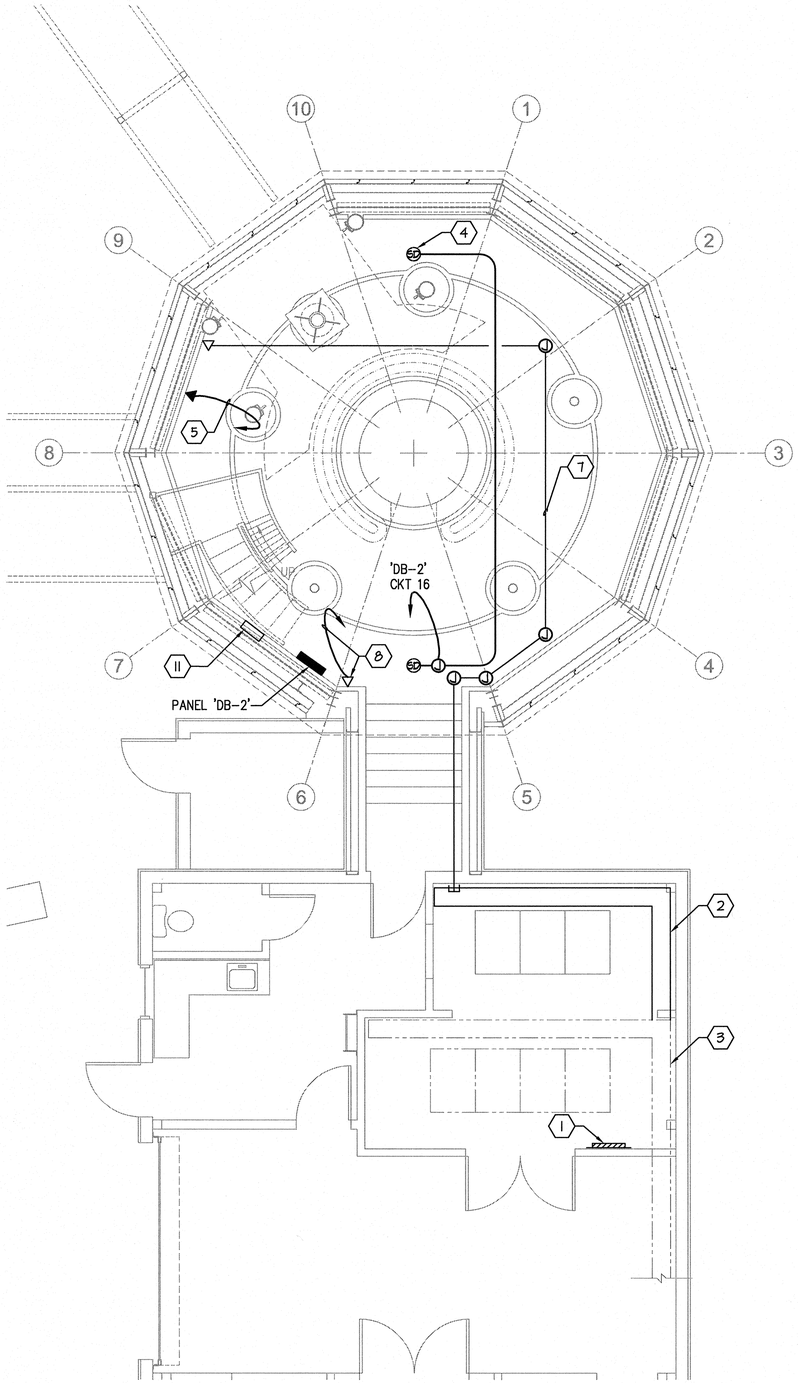


LOWER LEVEL ELECTRICAL AUXILIARY PLAN

SCALE: 1/4"=1'-0"

NORTH

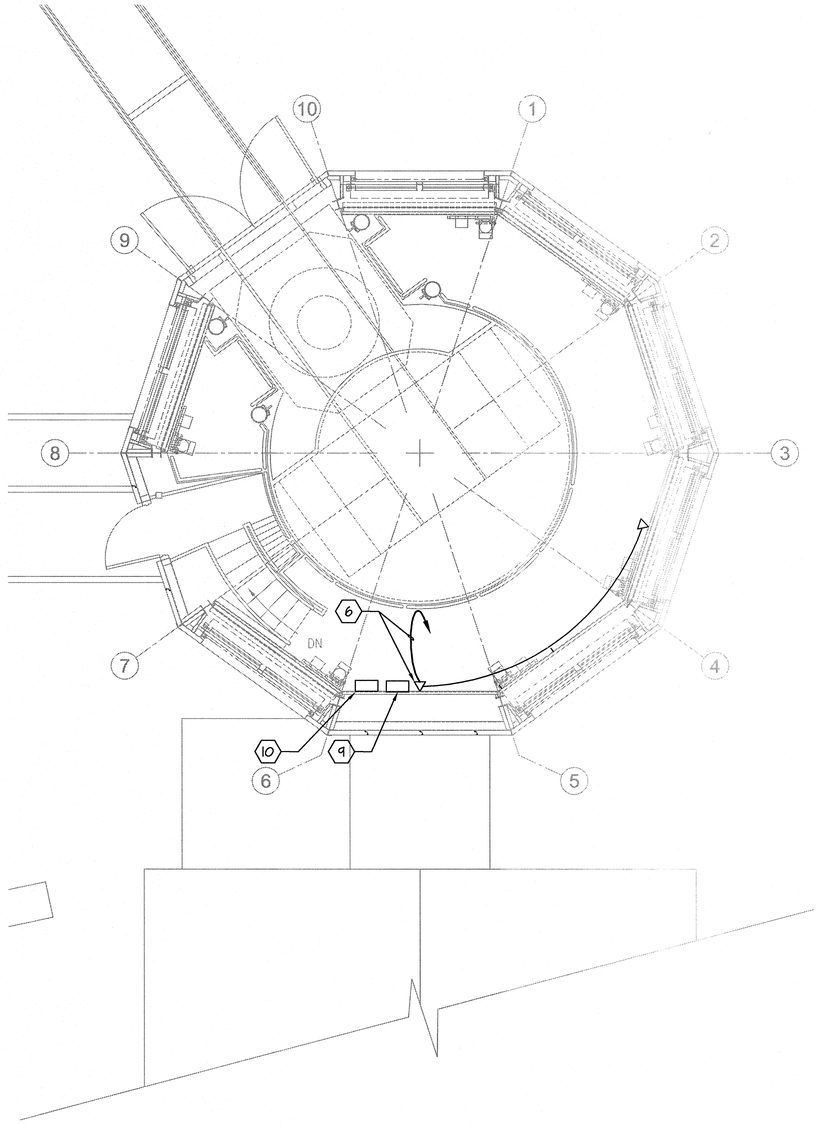


MEZZANINE LEVEL ELECTRICAL AUXILIARY PLAN

SCALE: 1/4"=1'-0"

NORTH

## KEYNOTES

1. EXISTING TELEPHONE TERMINAL BOARD. SHOWN FOR REFERENCE ONLY.
2. PROVIDE STEEL LADDER TYPE CABLE TRAY TO MATCH EXISTING. MOUNT CABLE TRAY AT SAME ELEVATION AS EXISTING.
3. EXISTING STEEL LADDER TYPE CABLE TRAY TO REMAIN. CONNECT NEW CABLE TRAY INTO EXISTING.
4. PROVIDE LOCAL, SELF CONTAINED, 120V TYPE SMOKE DETECTOR, KIDDE #PE120 OR APPROVED EQUAL.
5. PROVIDE ONE (1) 3/4"C TO EXISTING TELEPHONE TERMINAL BOARD.
6. PROVIDE ONE (1) 3/4"C TO OWNER FURNISHED COUMPUTER RACK. OUTLET TO BE AN ETHERNET LINK TO 'CP-1' ENCLOSURE. REFER TO KEY NOTE 23, SHEET EP101. VERIFY WITH OWNER EXACT LOACTION OF OUTLET PRIOR TO INSTALLATION.
7. PROVIDE ONE (1) 3"C TO COMPUTER ROOM. VERIFY WITH OWNER EXACT LOCATION PRIOR TO INSTALLATION.
8. PROVIDE ONE (1) 3/4"C TO COMPUTER ROOM. OUTLET TO BE AN ETHERNET LINK TO TCS CABINET. REFER TO KEY NOTE 23, SHEET EP101 FOR LOCATION OF TCS CABINET. VERIFY WITH OWNER EXACT LOCATION PRIOR TO INSTALLATION.
9. CONTROL PANEL 'CP-1'. SHOWN FOR REFERENCE ONLY.
10. DOME CONTROL PANEL SHOWN FOR REFERENCE ONLY.
11. TELESCOPE CONTROL SYSTEM RAC (TCS) SHOWN FOR REFERENCE ONLY.

## GENERAL NOTES

1. REFERENCE DRAWING E001 FOR ELECTIRCAL SYMBOLS, ABBREVIATIONS AND GENERAL NOTES.
2. VERIFY AND COORDINATE WITH OWNER EXACT LOCATION AND ROUTES OF ALL CONDUITS PRIOR TO INSTALLATION.

**THIS DRAWING IS FOR REFERENCE ONLY, IT CONTAINS NO PHASE 4 TASKS**

ENRICO B. LAOS
LICENSED PROFESSIONAL ENGINEER
No. 11778-E
HAWAII U.S.A.

THIS WORK WAS PREPARED BY ME OR UNDER MY SUPERVISION AND CONSTRUCTION OF THIS PROJECT WILL BE UNDER MY OBSERVATION.

SIGNATURE 08/12/11

04/30/2012
EXPIRATION DATE OF LICENSE

# Pan-STARRS PS2 Lure Modifications
# University of Hawaii
## (PHASE 4)

MAUI, HALEAKALA, HAWAII


2051 W. SUNSET RD.
SUITE NO. 101
TUCSON, ARIZONA 85704
TEL. (520) 293-1488
FAX (520) 293-8349
WWW.M3ENG.COM

ARCHITECTURE
ENGINEERING
CONSTRUCTION MANAGEMENT


### Revisions

| | Description | Date |
|---|---|---|
| 1 | | |
| 2 | | |
| 3 | | |
| 4 | | |
| 5 | | |
| 6 | | |

Drawn: PP
Checked: EBL
Issue Date: 04-04-11

Drawing Title
ELECTRICAL AUXILIARY PLAN

Sheet Number
EY101

M3PN 100064

Last Update: 8.12.2011

File: P:\2010\100064\Electrical\Drawings\EY101.dwg LAST UPDATE: AUG 12, 2011 @ 3:52 PM BY: pp1731 LAST REV: PLOT SCALE: 1:1

# Pan-STARRS PS2 Lure Modifications for the University of Hawaii

MAUI, HALEAKALA HAWAII

**(PHASE 4)**

**Pan-STARRS PS2 Lure Modifications University of Hawaii (PHASE 4)**

MAUI, HALEAKALA, HAWAII

2051 W. SUNSET RD.
SUITE NO. 101
TUCSON, ARIZONA 85704
TEL. (520) 293-1488
FAX (520) 293-5349
WWW.M3ENG.COM

ARCHITECTURE
ENGINEERING
CONSTRUCTION MANAGEMENT

**Revisions**

| Description | Date |
|---|---|
| 1 | |
| 2 | |
| 3 | |
| 4 | |
| 5 | |
| 6 | |

Drawn: S.P.D.
Checked: J.T.U.
Issue Date: 04–04–11

Drawing Title

**COVER SHEET**

Sheet Number

**GI001**

M3PN 100064

Last Update: 4.4.2011

JOSE TERAN
LICENSED PROFESSIONAL ARCHITECT
No. 13293
HAWAII U.S.A.

THIS WORK WAS PREPARED BY ME OR UNDER MY SUPERVISION AND CONSTRUCTION OF THIS PROJECT WILL BE UNDER MY OBSERVATION.

SIGNATURE 04.04.2011 EXPIRATION DATE OF LICENSE 04.30.2012

# ABBREVIATIONS

NOTE: NOT ALL ABBREVIATIONS SHOWN BELOW ARE USED IN THIS SET OF DRAWINGS.

| | |
|---|---|
| & | AND |
| A.B. | ANCHOR BOLT |
| ABUT | ABUTMENT |
| ABC | AGGREGATE BASE COURSE |
| ABV | ABOVE |
| AC | ACOUSTICAL SPRAY ON CEILING |
| ACI | AMERICAN CONCRETE INSTITUTE |
| L | ANGLE (STRUCTURAL) |
| AFF | ABOVE FINISHED FLOOR |
| ALT | ALTERNATE |
| ALUM | ALUMINUM |
| ANSI | AMERICAN NATIONAL STANDARDS INSTITUTE |
| AP | ACOUSTICAL WALL PANEL |
| APPROX | APPROXIMATE |
| ARCH | ARCHITECT(URAL) |
| ARS | ARIZONA REVISED STATUTES |
| ASPH | ASPHALT |
| ASTM | AMERICAN SOCIETY FOR TESTING MATERIALS |
| AVG | AVERAGE |
| AWG | AMERICAN WIRE GAGE |
| AZ | AZIMUTH |
| B | BRICK |
| B.BD | BULLETIN BOARD |
| BD | BOARD |
| B.L. | BUILDING LINE |
| BLDG | BUILDING |
| BLK(G) | BLOCK(ING) |
| BLT | BOLT |
| BLW | BELOW |
| BM | BEAM |
| B.M. | BENCH MARK |
| BOF | BOTTOM OF FOOTING |
| BOT | BOTTOM |
| BRG | BEARING |
| BUR | BUILT UP ROOFING |
| CAB | CABINET |
| C/C | CENTER TO CENTER |
| CF | CUBIC FOOT |
| CFCI | CONTRACTOR FURNISHED/ CONTRACTOR INSTALLED |
| CFM | CUBIC FEET PER MINUTE |
| CIP | CAST-IN-PLACE |
| CJ | CONTROL JOINT |
| CL | CENTER LINE |
| CLG | CEILING |
| CLOS | CLOSET |
| CLR | CLEAR(ANCE) |
| CO | CLEAN OUT |
| COL | COLUMN |
| CONC | CONCRETE |
| CONF | CONFERENCE |
| CONN | CONNECTION |
| CONST | CONSTRUCTION |
| CONT | CONTINUOUS |
| CONTR | CONTRACT(OR) |
| COT | CITY OF TUCSON |
| CP | CARPET |
| CR | STAGE CURTAIN |
| CT | CERAMIC TILE |
| CTR | CENTER |
| CW | COLD WATER |
| d | PENNY (NAIL SIZE) |
| DBL | DOUBLE |
| DEG | DEGREE |
| DEM | DEMOLISH, DEMOLITION |
| DESC. | DESCRIPTION |

| | |
|---|---|
| D.F. | DRINKING FOUNTAIN |
| DIAG | DIAGONAL |
| DIA. | DIAMETER |
| DIM | DIMENSION |
| DISP | DISPENSER |
| DL | DEAD LOAD |
| DN | DOWN |
| DO | DITTO |
| DR | DOOR |
| D.S. | DOWNSPOUT |
| DTR | DUCT THROUGH ROOF |
| DTW | DUCT THROUGH WALL |
| DWG(S) | DRAWING(S) |
| E, (E) | EXISTING TO REMAIN |
| EA | EACH |
| ELEV | ELEVATION |
| EIFS | EXTERIOR INSULATION FINISH SYSTEM |
| EOM | EDGE OF MASONRY |
| EOS | EDGE OF STEM WALL |
| EP | EPOXY PAINT |
| EQ | EQUAL |
| EQUIP | EQUIPMENT |
| ESMT | EASEMENT |
| EWC | ELECTRIC WATER COOLER |
| EXIST | EXISTING |
| EXP | EXPANSION, EXPOSED |
| EXT | EXTERIOR |
| F | FAHRENHEIT |
| FD | FLOOR DRAIN |
| FDN | FOUNDATION |
| F.E. | FIRE EXTINGUISHER |
| FF | FINISH FLOOR |
| FFE | FINISH FLOOR ELEVATION |
| F.G. | FINISHED GRADE |
| FIN | FINISH(ED) |
| FLR | FLOOR |
| FLUOR | FLUORESCENT |
| FLG | FLANGE |
| FLASH | FLASHING |
| FOS | FACE OF STUD |
| FT | FOOT, FEET |
| FTG | FOOTING |
| FTR | FLUE THROUGH ROOF |
| FURN | FURNITURE |
| G | GYPSUM BOARD |
| GALV | GALVANIZED |
| G.B. | GRAB BAR |
| G.I. | GALVANIZED IRON |
| GL | GLASS, GLAZING |
| GWB | GYPSUM WALL BOARD |
| GYP | GYPSUM |
| H | HEIGHT |
| H.B. | HOSE BIBB |
| HC | HANDICAPPED |
| HGT | HEIGHT |
| H.M. | HOLLOW METAL |
| HORIZ | HORIZONTAL |
| H.P.S. | HIGH PRESSURE SODIUM |
| HVAC | HEATING/VENTILATING/ AIR CONDITIONING |
| I.D. | INSIDE DIAMETER |
| INCL | INCLUDE(D, ING) |
| INFO | INFORMATION |
| INV. EL. | INVERT ELEVATION |

| | |
|---|---|
| INSUL | INSULATION |
| INT | INTERIOR |
| IRRIG | IRRIGATION |
| JB | JUNCTION BOX |
| JCT | JUNCTION |
| JT | JOINT |
| L | LENGTH |
| LAM | LAMINATE(D) |
| LAV | LAVATORY |
| LB | POUND |
| LH | LEFT HAND |
| LT(G) | LIGHT(ING) |
| LT.WT | LIGHT WEIGHT |
| LVR | LOUVER |
| M | MOVABLE PARTITION |
| MACH | MACHINE |
| MAINT | MAINTENANCE |
| MAS | MASONRY, MASON |
| MATL | MATERIAL(S) |
| MAX | MAXIMUM |
| MB | MACHINE BOLTS |
| MCJ | MASONRY CONTROL JOINT |
| MEAS | MEASURE |
| MECH | MECHANICAL |
| MEMB | MEMBRANE |
| MFD | MANUFACTURED |
| MFG | MANUFACTURING |
| MFR | MANUFACTURER |
| MH | MANHOLE |
| MIN | MINIMUM, MINUTES |
| MIR | MIRROR |
| MISC | MISCELLANEOUS |
| M.O. | MASONRY OPENING |
| MT | MOSAIC TILE |
| MTL | METAL |
| # | NUMBER |
| N | NEW |
| N/A | NOT APPLICABLE |
| NAT | NATURAL |
| NEC | NATIONAL ELECTRIC CODE |
| NEUT | NEUTRAL |
| NFPA | NATIONAL FIRE PROTECTION ASSOCIATION |
| N.I.C. | NOT IN CONTRACT |
| NOM | NOMINAL |
| NTS | NOT TO SCALE |
| OA | OVERALL |
| O.C. | ON CENTER(S) |
| O.D. | OUTSIDE DIAMETER |
| OFCI | OWNER FURNISHED/ CONTRACTOR INSTALLED |
| OFOI | OWNER FURNISHED/ OWNER INSTALLED |
| OH | OVERHEAD |
| OPNG | OPENING |
| OPP | OPPOSITE |
| ORN | ORNAMENTAL |
| PL | PLATE |
| P.L., P | PROPERTY LINE |
| PLF | POUNDS PER LINEAL FOOT |
| PLMB | PLUMBING |
| PLS.LAM | PLASTIC LAMINATE |
| PLYWD | PLYWOOD |
| PM | PRESSED METAL |
| PNL | PANEL |

| | |
|---|---|
| POLYISO | POLYISOCYANURATE |
| REQ'D | REQUIRED |
| REQ'MENT | REQUIREMENT |
| R | RESILIENT BASE |
| R | RADIUS |
| RR | RESTROOM(S) |
| ROW | RIGHT OF WAY |
| SC | SOLID CORE |
| SCHD | SCHEDULE |
| S.D. | SOAP DISPENSER |
| SECT | SECTION |
| SF | SQUARE FOOT (FEET) |
| SHT | SHEET |
| SIM | SIMILAR |
| SOV | SHUT OFF VALVE |
| SPECS | SPECIFICATIONS |
| SQ. | SQUARE |
| S.S. | SERVICE SINK |
| STA | STATION |
| STD | STANDARD |
| STR | STORAGE |
| STL | STEEL |
| STRUC | STRUCTURAL |
| SURF | SURFACE |
| SUSP | SUSPEND(ED) |
| SYM | SYMMETRY(ICAL) |
| SYS | SYSTEM |
| SW | SWITCH |
| T&B | TOP AND BOTTOM |
| TEL | TELEPHONE |
| T.O. | TOP OF |
| T.O.BM. | TOP OF BEAM |
| T.O.C. | TOP OF CONCRETE |
| T.O.FTG | TOP OF FOOTING |
| T.O.M. | TOP OF MASONRY |
| T.O.P. | TOP OF PARAPET |
| T.O.S. | TOP OF STEEL |
| T.O.W. | TOP OF WALL |
| TPD | TOILET PAPER DISPENSER |
| TS | TUBE STEEL |
| TV | TELEVISION |
| TYP | TYPICAL |
| UG | UNDERGROUND |
| UMC | UNIFORM MECHANICAL CODE |
| UNF | UNFINISHED |
| UNG | UNDERGROUNDED |
| UNO | UNLESS NOTED OTHERWISE |
| UPC | UNIFORM PLUMBING CODE |
| UTIL | UTILITY(TIES) |
| VAR | VARIES |
| VGB | VERTICAL GRAB BAR |
| VCT | VINYL COMPOSITION TILE |
| VER | VERIFY |
| VERT | VERTICAL |
| VOL | VOLUME |
| VTR | VENT THROUGH ROOF |
| W | WIDTH |
| W/ | WITH |
| WD | WOOD |
| WH | WALL HUNG |
| W/O | WITHOUT |
| WSCT | WAINSCOT |
| WWF | WELDED WIRE FABRIC |
| YD | YARD |
| Z | GLAZING |

# MATERIAL SYMBOLS

(NOT ALL SYMBOLS ARE USED IN THIS SET)

- POURED CONCRETE
- EARTH
- GRAVEL
- BATT INSULATION
- WOOD (ROUGH)
- WOOD (FINISHED)
- PLYWOOD
- METAL (LARGE SCALE)
- METAL (SMALL SCALE)
- GYPSUM WALL BOARD
- RIGID INSULATION

# LOCATION MAP

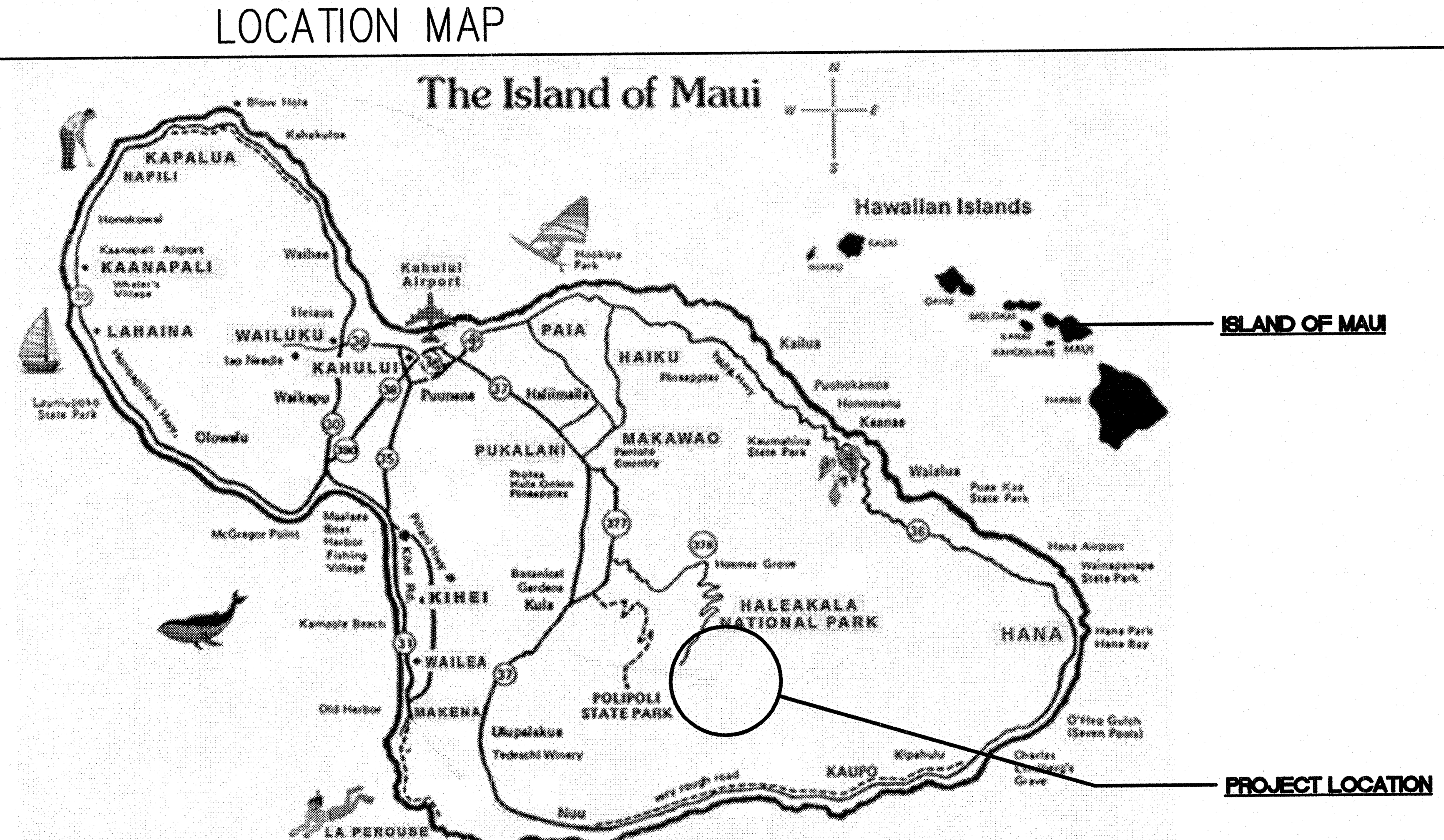


# SCOPE OF WORK

1. THE WORK INCLUDES THE SELECTIVE DEMOLITION AND REMODELING OF THE EXISTING PAN-STARRS PS2 FACILITY FOR THE UNIVERSITY OF HAWAII AT MANOA. THE WORK INCLUDES BUT IS NOT LIMITED TO SELECTIVE DEMOLITION, ARCHITECTURAL, STRUCTURAL, MECHANICAL, AND ELECTRICAL WORK AS DEFINED IN THE CONSTRUCTION DOCUMENTS.

2. THIS WORK HAS BEEN SUB-DIVIDED INTO FOUR PHASES. THE WORK FOR PHASE 4 HAS BEEN COLOR CODED AS TASKS SHOWN IN ORANGE. GREEN DENOTES PHASE 3 WORK. BLUE DENOTES PHASE 2 WORK. RED DENOTES PHASE 1 WORK. BLACK SHOWS WORK OUTSIDE THE SCOPE OF THESE FOUR PHASES.

# GENERAL REQUIREMENTS

1. THE GENERAL CONTRACTOR SHALL PROTECT AS REQUIRED THE SURROUNDING BUILDINGS AND SITE DURING CONSTRUCTION FROM DAMAGE.

2. THE CONTRACTOR SHALL FOLLOW ALL RULES AND REGULATIONS OF WORKING ON HALEAKALA, HAWAII. REFER TO THE SPECIAL PROVISIONS SECTION OF DOCUMENT PSDC-360-005 FOR ADDITIONAL INFORMATION.

3. THE CONTRACTOR IS TO MAINTAIN A VERY CLEAN WORK ENVIRONMENT AS TO PREVENT ANY DEBRIS OR MATERIAL BEING BLOWN AWAY FROM THE SITE. ALL MATERIAL SHALL BE PUT AWAY ON A DAILY BASIS AS TO PREVENT ANY DAMAGE OR POLLUTION TO THE SURROUNDING AREA.

4. THE CONTRACTOR IS TO COORDINATE ALL CONSTRUCTION EFFORTS WITH THE OWNER.

5. THE ROTATING DOME IS TO REMAIN IN PLACE AND OPERABLE DURING THE ENTIRE CONSTRUCTION PERIOD. ANY ROTATION OF THE DOME MUST BE COORDINATED WITH THE OWNER. PROTECT THE DOME AS REQUIRED TO PREVENT ANY DAMAGE TO THE STRUCTURE, ELECTRICAL, CONTROLS AND MECHANISMS, ETC.

6. PAN-STARRS PS1 AND THE CONTROL BUILDING (ADJACENT TO PS2) ARE TO REMAIN IN OPERATION DURING CONSTRUCTION. THIS SCOPE OF WORK IS NOT TO LIMIT THE OWNER'S ABILITY TO CARRY ON WITH ITS NORMAL OPERATIONS.

7. ALL EXISTING UTILITIES SHUT-DOWN NEED TO BE COORDINATED WITH THE OWNER 48-HOURS IN ADVANCE.

# KEYING SYMBOLS

| | |
|---|---|
| 101A | DOOR SYMBOL REFER TO DOOR SCHEDULE |
| WOMEN'S SHOWER 133 | ROOM SYMBOL REFER TO ROOM FINISH SCHEDULE |
| A | COLUMN LINE |
| A / AR302 (DETAIL NUMBER / SHEET NUMBER) | GENERAL BUILDING SECTION |
| 4 / AR501 | DETAIL |
| 4 | KEYNOTE |

# SHEET INDEX


GENERAL
- GI001 COVER SHEET
- GI002 ABBREVIATIONS, MATERIAL AND KEYING SYMBOLS, LOCATION MAP

CIVIL
- CI101 SITE IMPROVEMENT PLAN

DEMOLITION
- AD101 DEMOLITION FLOOR PLAN
- ESD101 ELECTRICAL SITE DEMOLITION PLAN
- ED101 ELECTRICAL DEMOLITION PLAN

STRUCTURAL
- SB001 GENERAL STRUCTURAL NOTES
- SB002 GENERAL STRUCTURAL NOTES CONTINUED
- SB101 STRUCTURAL FOUNDATION PLAN
- SB201 TELESCOPE PIER SECTION AND ELEVATION
- SB401 ENLARGED TELESCOPE PIER FOUNDATION PLAN
- SB501 FOUNDATION DETAILS
- SF101 STRUCTURAL FRAMING PLAN
- SF201 ENCLOSURE WALL FRAMING ELEVATION
- SF202 MIRROR REMOVAL RAILS MODIFICATION – ELEVATION
- SF401 ENLARGED STAIR FRAMING PLAN
- SF501 STRUCTURAL FRAMING DETAILS
- SF502 STRUCTURAL FRAMING DETAILS
- SF503 STRUCTURAL FRAMING DETAILS
- SJ501 TYPICAL DETAILS

ARCHITECTURAL
- AR001 ARCHITECTURAL SPECIFICATIONS SHEET 1 OF 2
- AR002 ARCHITECTURAL SPECIFICATIONS SHEET 2 OF 2
- AR101 FLOOR PLAN
- AR201 EXTERIOR ELEVATIONS
- AR301 BUILDING SECTION A–A
- AR302 BUILDING SECTION B–B
- AR303 WALL SECTION AND STAIR PLAN
- AR401 ENLARGED FLOOR PLANS
- AR501 ARCHITECTURAL DETAILS
- AR502 ARCHITECTURAL DETAILS

MECHANICAL
- MH001 HVAC GENERAL NOTES
- MH101 HVAC MECHANICAL FLOOR PLAN
- MH301 HVAC MECHANICAL SECTION
- MH501 HVAC DETAILS
- MH601 HVAC SCHEDULES
- MH701 HVAC CHILLED WATER SCHEMATIC
- MH702 HVAC CONTROL NOTES AND SEQUENCE
- MP101 HVAC MECHANICAL PIPING PLAN

ELECTRICAL
- E001 ELECTRICAL SYMBOLS, ABBREVIATIONS AND GENERAL NOTES
- E002 ELECTRICAL SPECIFICATIONS
- ES101 ELECTRICAL SITE PLAN
- EG101 ELECTRICAL GROUNDING PLAN
- EL101 ELECTRICAL LIGHTING PLAN
- EP101 ELECTRICAL POWER PLAN
- EP102 ELECTRICAL AIR GLOW BUILDING POWER PLAN
- EP601 ELECTRICAL PANEL SCHEDULES SHEET 1
- EP602 ELECTRICAL PANEL SCHEDULES SHEET 2
- EP701 ELECTRICAL ONE LINE DIAGRAM
- EY101 ELECTRICAL AUXILIARY PLAN


JOSE TERAN · LICENSED PROFESSIONAL ARCHITECT No. 13293 · HAWAII U.S.A.

THIS WORK WAS PREPARED BY ME OR UNDER MY SUPERVISION AND CONSTRUCTION OF THIS PROJECT WILL BE UNDER MY OBSERVATION.

SIGNATURE 04.04.2011

04.30.2012 EXPIRATION DATE OF LICENSE

**Pan-STARRS PS2 Lure Modifications**
**University of Hawaii**
**(PHASE 4)**

MAUI, HALEAKALA, HAWAII


2051 W. SUNSET RD. SUITE NO. 101
TUCSON, ARIZONA 85704
TEL. (520) 293-1488
FAX (520) 293-8349
WWW.M3ENG.COM

ARCHITECTURE
ENGINEERING
CONSTRUCTION MANAGEMENT


**Revisions**

| Description | Date |
|---|---|
| 1 | |
| 2 | |
| 3 | |
| 4 | |
| 5 | |
| 6 | |

Drawn: S.P.D.
Checked: J.T.U.
Issue Date: 04–04–11

Drawing Title
**ABBREVIATIONS, MATERIAL AND KEYING SYMBOLS LOCATION MAP**

Sheet Number
**GI002**

**M3PN 100064**

Last Update: 4.4.2011

## 15000 MECHANICAL GENERAL CONDITIONS

1. PROVIDE ALL LABOR, EQUIPMENT, MATERIALS, SERVICE AND RELATED ITEMS NECESSARY TO COMPLETE THE INSTALLATION OF THE MECHANICAL EQUIPMENT INDICATED AND SPECIFIED.
2. ALL WORK DESCRIBED AND EXECUTED UNDER THIS SECTION SHALL COMPLY WITH THE GENERAL REQUIREMENTS OF THE ARCHITECTURAL DRAWINGS.
3. THIS SECTION VALID ONLY WHEN CONSIDERED IN TOTAL WITH OTHER CONTRACT DOCUMENTS.
4. NOTATIONS ON DRAWINGS WHICH EXCEED REQUIREMENTS OF THIS SECTION GOVERN WORK.
5. CROSS-REFERENCES ARE FOR CONVENIENCES OF READER AND THEIR INCLUSION IN OR OMISSION FROM ANY SECTION IN NO WAY LIMITS ITS SCOPE OR INTENT OF ANY CONTRACT DOCUMENTS.
6. ALL WORK SHALL COMPLY WITH THE FOLLOWING QUALITY CONTROL STANDARDS AS A BARE MINIMUM:
   NATIONAL FIRE PROTECTION ASSOCIATION STANDARDS (NFPA)
   AMERICAN SOCIETY OF MECHANICAL ENGINEERS (ASME)
   AMERICAN SOCIETY OF HEATING, REFRIGERATION, AND AIR CONDITIONING ENGINEERS (ASHRAE)
   SHEET METAL AND AIR CONDITIONING CONTRACTOR'S NATIONAL ASSOCIATION STANDARDS (SMACNA)
   AIR CONDITIONING AND REFRIGERATION INSTITUTE STANDARDS (ARI)
   INTERNATIONAL PLUMBING CODE (2006)
   INTERNATIONAL BUILDING CODE (2006)
   INTERNATIONAL MECHANICAL CODE (2006)
   NATIONAL ELECTRICAL CODE (2008)
   INTERNATIONAL ENERGY CONSERVATION CODE (2006)
   COMPLY WITH ALL THE REQUIREMENTS AND AMENDMENTS OF ALL LOCAL AND STATE AGENCIES
7. MATERIALS AND EQUIPMENT SHALL BE STANDARD PRODUCTS OF A REPUTABLE MANUFACTURER REGULARLY ENGAGED IN MANUFACTURE OF THE SPECIFIED ITEM. WHERE MORE THAN ONE UNIT IS REQUIRED, FURNISH BY THE SAME MANUFACTURER, EXCEPT WHERE SPECIFIED OTHERWISE. INSTALL MATERIAL AND EQUIPMENT IN ACCORDANCE WITH MANUFACTURER'S RECOMMENDATIONS. SHOULD VARIANCE BETWEEN PLANS AND SPECIFICATIONS OCCUR, CONTACT OWNER'S REPRESENTATIVE IMMEDIATELY FOR RESOLUTION.
8. DELIVER MATERIALS OR EQUIPMENT TO THE PROJECT IN THE MANUFACTURER'S ORIGINAL, UNOPENED, LABELED CONTAINERS, ADEQUATELY PROTECT AGAINST MOISTURE, TAMPERING, OR DAMAGE FROM IMPROPER HANDLING OR STORAGE. DO NOT DELIVER MATERIALS TO THE JOB BEFORE THEY ARE READY FOR INSTALLATION, UNLESS ADEQUATE SECURITY IS PROVIDED.
9. OWNER'S REPRESENTATIVE MAY REQUIRE REMOVAL FROM THE PREMISES OF SUCH MATERIAL OR WORK AS, IN THE OPINION OF THE OWNER'S REPRESENTATIVE, IS NOT IN ACCORDANCE WITH SPECIFICATIONS. OWNER'S REPRESENTATIVE HAS THE AUTHORITY TO STOP WORK WHENEVER SUCH STOPPAGE MAY BE NECESSARY TO INSURE PROPER EXECUTION OF CONTRACT.
10. DRAWINGS ARE GENERALLY DIAGRAMMATIC AND ARE INTENDED TO CONVEY SCOPE OF WORK AND TO INDICATE GENERAL ARRANGEMENT OF EQUIPMENT, DUCTS, CONDUITS, PIPING, AND FIXTURES. THEY ARE NOT INTENDED TO SHOW EVERY OFFSET OF FITTING OR EVERY STRUCTURAL DIFFICULTY THAT MAY BE ENCOUNTERED DURING INSTALLATION OF THE WORK. LOCATIONS OF ITEMS NOT DEFINITELY FIXED BY DIMENSIONS ARE APPROXIMATE ONLY. EXACT LOCATIONS NECESSARY TO SECURE BEST CONDITIONS AND RESULTS MUST BE DETERMINED AT TIME OF CONSTRUCTION AND SHALL HAVE APPROVAL OF OWNER'S REPRESENTATIVE BEFORE BEING INSTALLED. COORIDNATE WITH OTHER TRADES PRIOR TO INSTALLTION OF EQUIPMENT. DO NOT SCALE DRAWINGS.
11. IF SO DIRECTED BY OWNER'S REPRESENTATIVE, WITHOUT EXTRA CHARGE, MAKE REASONABLE MODIFICATIONS IN LAYOUT AS NEEDED TO PREVENT CONFLICT WITH WORK OF OTHER TRADES OR FOR PROPER EXECUTION OF WORK.
12. MAKE NOTES OF ANY CHANGES MADE IN LAYOUT AND INCORPORATE IN "RECORD" DRAWINGS.
13. ALL TESTS SHALL BE WITNESSED BY OWNER REPRESENTATIVE.
14. SUBMIT SIX (6) COPIES OF SHOP DRAWINGS OR LITERATURE FOR APPROVAL IN AN INDEXED 3-RING BINDER ON THE FOLLOWING ITEMS: CHILLERS (INCLUDING EXPANSION MODULES), FAN COILS, WATER HEATERS, PUMPS, DIFFUSERS AND GRILLES, DUCT INSULATION AND LINER MATERIAL, PIPING HANGERS AND SUPORTS, AND ACCESS DOORS.
15. CONTRACTOR SHALL BE RESPOBNSIBLE FOR ANY ADDED DESIGN OR INSTALLATION EXPENSE RESULTING FROM SUBSTITUTION OF EQUIPMENT.
16. THE CONTRACTOR SHALL PROVIDE ALL OPENINGS REQUIRED THROUGH THE ROOF OR WALLS.
17. CONTRACTOR SHALL GUARANTEE ALL PARTS AND LABOR FOR ONE (1) YEAR FROM FINAL DATE OF ACCEPTANCE AND PROVIDE AN ADDITIONAL FOUR (4) YEARS WARRANTY FOR ALL A/C COMPRESSORS.
18. FURNISH THREE (3) SETS OF OPERATION, MAINTENANCE, WIRING, AND WARRANTY INFORMATION ON ALL EQUIPMENT TO THE ARCHITECT IN INDEXED 3-RING BINDERS.
19. CONTRACTOR SHALL FURNISH ANY MISCELLANEOUS ITEMS NORMALLY USED, SPECIFICALLY MENTIONED OR NOT, TO RENDER A COMPLETE INSTALLATION.
20. COORDINATE ALL FINAL TEMPERATURE SENSOR LOCATIONS WITH OWNER PRIOR TO INSTALLATION.
21. INSTALL DUCTS AND PIPING UNLESS OTHERWISE INDICATED, VERTICALLY AND HORIZONTALLY AND PARALLEL AND PERPENDICULAR TO BUILDING LINES; AVOID DIAGONAL RUNS.

## 15060 PIPE HANGERS AND SUPPORTS

1. HANGERS AND SUPPORTS SHALL BE FACTORY FABRICATED ACCORDING TO MSS SP-58.
2. INSTALL HANGER, SUPPORTS, CLAMPS, AND ATTACHMENTS PER MSS SP-69 AND SP-89 AS REQUIRED TO PROPERLY SUPPORT PIPING FROM BUILDING STRUCTURE OR AS REQUIRED BY LOCAL CODE. ARRANGE FOR GROUPING OF PARALLEL RUNS OF HORIZONTAL SUPPORT PIPING TOGETHER ON FIELD FABRICATED, HEAVY DUTY TRAPEZE HANGERS WHERE POSSIBLE.
3. INSTALL HANGERS AND SUPPORTS SO THAT LIVE AND DEAD LOADING AND STRESSES FROM MOVEMENT WILL NOT BE TRANSMITTED TO CONNECTED EQUIPMENT.

## 15080 MECHANICAL PIPE INSULATION

1. PROVIDE CLOSED-CELL ELASTOMERIC INSULATION. THERMAL CONDUCTIVITY 0.26 AVERAGE MAXIMUM AT 75 DEG F MEAN TEMPERATURE. INSULATION MUST MEET A FLAME SPREAD RATING OF 25 OR LESS AND A DEVELOPED RATING OF 50 OR LESS. CHILLED WATER PIPE 4 INCHES AND SMALLER SHALL RECEIVE 1-1/2 INCH INSULATION. CONDENSATE PIPE SHALL RECEIVE 1/2 INCH INSULATION. INSULATED VALVES AND FITTINGS SHALL RECEIVE SAME INSULATION & THICKNESS AS THE ATTACHED PIPE.
2. THE VAPOR BARRIER SHALL BE MAINTAINED FOR ALL PIPING AND FITTINGS OPERATING AT 60 F OR BELOW.
3. TIGHTLY BUTT LONGITUDINAL SEAMS AND END JOINTS, BOND WITH ADHESIVE. APPLY INSULATION WITH A MINIMUM NUMBER OF JOINTS. SECURE WITH ADHESIVE ALONG BUTT STRIP AS PER INSULATION MANUFACTURER'S INSTRUCTIONS. APPLY INSULATION WITH LONGITUDINAL SEAMS AT BOTTOM OF PIPE. CLEAN AND DRY SURFACES TO RECIEVE SELF-SEALING LAP. TO MAINTAIN VAPOR BARRIER APPLY VAPOR BARRIER COATING ON SEAMS AND JOINTS AND AT ENDS BUTTED TO FLANGES, UNIONS, VALVES AND FITTINGS.
4. APPLY INSULATION CONTINUOUSLY THROUGH WALLS AND PARTITIONS EXCEPT FIRE RATED ASSEMBLIES. TERMINATE INSULATION AT PENETRATIONS OF FIRE RATED ASSEMBLIES. SEAL INSULATION ENDS WITH VAPOR BARRIER COATING. SEAL AROUND PENETRATION WITH FIRE STOPPING OR FIRE RESISTANT JOINT SEALER.
5. EXTERIOR INSULATION SHALL BE COVERED WITH A 0.02 INCH THICK ALUMINUM JACKET SECURED WITH 0.02 INCH THICK, 1/2 INCH WIDE ALUMINUM STRAPS EVERY 12 INCHES.
6. PIPE IDENTIFICATION COLORS SHALL COMPLY WITH ASME A13.1. THE LABEL SHALL INDICATE FLUID AND DIRECTION OF FLOW. MAXIMUM SPACING OF LABELS SHALL BE 50 FT, REDUCE TO 25 FT IN CONGESTED AREAS, PLACED NEAR EACH PIECE OF EQUIPMENT OR BRANCH AND ON BOTH SIDES OF THE WALL AT PENETRATIONS.

## 15181 HYDRONIC PIPING

1. COMPLY WITH ASME B31.9, "BUILDING SERVICES PIPING" FOR MATERIAL, PRODUCTS AND INSTALLATION. SAFETY VALVES AND PRESSURE VESSELS SHALL BEAR THE APPROPRIATE ASME LABEL.
2. PIPING SHALL BE COPPER TUGING, ASTM B 88, TYPE L WITH SOLDERED JOINTS. USE SOLDER HAVING A MELTING POINT BELOW 840 DEG F FOR GLOBE VALVES AND BELOW 421 DEG F FOR BALL VALVES.
3. USE BALL OR BUTTERFLY VALVES FOR SHUT OFF SERVICE AND BALL OR GLOBE VALVES FOR THROTTLING DUTY. BALL VALVE MSS SP-110 SHALL BE 2 PIECE BRASS BODY WITH FULL PORT, CHROME PLATED BRONZE BALL, PTFE SEATS, 600 PSIG MINIMUM CWP RATING AND BLOWOUT PROOF STEM. BUTTERFLY BALVE MSS SP-67 TYPE I, FOR TIGHT SHUTOFF, WITH DUCTILE IRON DISC, ONE PIECE 316 SS STEM AND 10 POSITION HAND LEVER OPERATOR. BRONZE GLOBE VALVES MSS SP-80 WITH BRONZE BODY AND DISC.
4. SLOPE PIPE TO FACILITATE DRAINAGE. INSTALL DRAIN VALVES AT ALL LOW POINTS AND MANUAL AIR VENTS AT ALL HIGH POINTS.
5. INSTALL UNIONS IN PIPES 2 INCHES AND SMALLER, ADJACENT TO EACH VALVE, AT FINAL CONNECTIONS OF EACH PIECE OF EQUIPMENTS AND ELSEWHERE AS INDICATED. USE DIELECTRIC UNIONS FOR JOINING DISSIMILAR PIPING MATERIALS.
6. INSTALL NEOPRENE DOUBLE SPHERE VIBRATION ISOLATOR AT INLET AND DISCHARGE CONNECTIONS TO CHILLERS, COOLING TOWERS, PUMPS, COOLING AND HEATING COILS AND OTHER MOTOR DRIVEN EQUIPMENT.

## 15763 FAN COIL UNITS

1. THE FAN COILS SHALL MEET THE CAPACITY REQUIREMENTS AS LISTED IN THE SCHEDULE AND BE UL LISTED. A PERFORMANCE RUN SHOWING COIL CAPACITIES, FAN CURVE, AND ELECTRICAL REQUIREMENTS INCLUDING WIRING DIAGRAM SHALL BE SUBMITTED.
2. THE CABINET SHALL BE OF GALVANIZED STEEL WITH FOIL FACED INSULATION OVER ENTIRE UNIT. REMOVABLE SIDE PANELS FOR ACCESS TO ALL INTERNAL COMPONENTS. INSULATED DRAIN PAN WITH CONDENSATE AND OVERFLOW CONNECTIONS. WATER COILS WITH COPPER TUBES AND MECHANICALLY BONDED ALUMINUM FINS, LEAK TESTED TO 300 PSIG UNDER WATER. CENTRIFUGAL FANS SHALL BE FORWARD CURVED WITH STEEL OR ALUMINUM WHEELS IN A STEEL FAN SCROLL, BELT OR DIRECTLY DRIVEN.
3. ELECTRIC RESISTANT ELECTRIC HEATER SHALL BE UL LISTED AND FACTORY MOUNTED AND WIRED. HEATING ELEMENT WIRE SHALL BE 80% NICKEL AND 20% CHROMIUM. MANUAL AND AUTOMATIC DISC TYPE THERMAL OVERLOAD PROTECTION SHALL BE PROVIDED. A DOOR INTERLOCKED DISCONNECT SWITCH SHALL BE PROVIDED.
4. FAN COIL SHALL HAVE A SINGLE POINT OF POWER CONNECTION AND 24V CONTROL POWER TRANSFORMER.

## 15815 METAL DUCTS AND ACCESSORIES

1. CHANGES TO LAYOUT OR CONFIGURATION OF DUCT SYSTEM MUST BE SPECIFICALLY APPROVED IN WRITING BY ARCHITECT. PROVIDE SCALE DRAWING OF PROPOSED CHANGES.
2. DUCTWORK SIZES SHOWN ARE SHEET METAL DIMENSIONS, FLEXIBLE DUCT SIZES ARE CLEAR INSIDE DIMENSIONS. ALL RECTANGULAR ELBOWS SHALL HAVE SINGLE THICKNESS TURNING VANES CONSTRUCTED PER SMACNA STANDARDS. ALL RECTANGULAR BRANCH ENTRY/TAKEOFFS SHALL HAVE 45 DEG ENTRY FITTING. ALL ROUND ELBOWS SHALL HAVE A MINIMUM RADIUS TO DIAMETER RATIO OF 1.5.
3. COMPLY WITH NFPA 90A "INSTALLATION OF AIR CONDITIONING AND VENTILATION SYSTEMS" OR NFPA 90B "INSTALLATION OF WARM AIR HEATING AND AIR CONDITIONING SYSTEMS". ALL COMPONENTS USED IN THE DUCT SYSTEM SHALL HAVE A MAXIMUM FLAME SPREAD INDEX OF 25 AND SMOKE DEVELOPED INDEX OF 50 WHEN TESTED ACCORDING TO ASTM E 84.
4. COMPLY WITH SMACNA'S "HVAC DUCT CONSTRUCTION STANDARDS - METAL AND FLEXIBLE" FOR ACCEPTABLE MATERIALS, MATERIAL THICKNESSES, AND DUCT CONSTRUCTION METHODS, UNLESS OTHERWISE INDICATED. USE GALVANIZED SHEET STEEL, LOCK FORMING QUALITY COMPLYING WITH ASTM A 653/A 653 M AND HAVING G60 COATING DESIGNATION, DUCTS SHALL HAVE MILL-PHOSPHATIZED FINISH FOR SURFACES EXPOSED TO VIEW. ALL PANELS 18" AND WIDER SHALL BE CROSS-BROKEN UNLESS INTERNAL LINING IS APPLIED TO THE DUCT. IN LIEU OF CROSS-BREAKING, METAL OF ONE GUAGE HEAVIER THAN INDICATED ON THE TABLE MAY BE USED. ALL DUCTS SHALL BE FREE FROM VIBRATION UNDER THE PRESSURE OF THE SYSTEM.
5. CONSTRUCT DUCT FOR A MINIMUM OF 2" POSITIVE/NEGATIVE PRESSURE CLASS.
6. SECURE BOARD INSULATION TIGHT AND SMOOTH WITH AT LEAST 50 PERCENT COVERAGE OF ADHESIVE. INSTALL BANDS SPACED 12 INCHES APART. PROTECT INSULATION UNDER BANDS AND AT EXTERIOR CORNERS WITH METAL CORNER ANGLES OR SPEED WASHERS AND WELDED PINS SPACED 18 INCHES APART EACH WAY AND 3 INCHES FROM INSULATION JOINTS. FILL JOINTS, SEAMS, BREAKS, PUNCTURES, AND CHIPPED EDGES WITH VAPOR BARRIER COMPOUND.
7. SECURE BLANKET INSULATION TIGHT AND SMOOTH. SECURE TO DUCT WITH LONG SIDES OR DIAMETERS SMALLER THAN 24 INCHES WITH BONDING ADHESIVE APPLIED IN 6 INCH WIDE TRANSVERSE STRIPS ON 12 INCH CENTERS. DUCTS WITH LONG SIDES OR DIAMETERS GREATER THAN 24 INCHES USE ANCHOR PINS SPACED 12 INCHES APART EACH WAY. APPLY BONDING ADHESIVE TO PREVENT SAGGING OF THE INSULATION. OVERLAP JOINTS 3 INCHES AND SEAL JOINTS, BREAKS, AND PUNCTURES WITH VAPOR BARRIER COMPUND.
8. SEAL ALL JOINTS AND SEAMS AIR TIGHT; APPLY SEALANT TO MALE END CONNECTORS BEFORE INSERTION AND AFTERWARD TO COVER ENTIRE JOINT AND SHEET METAL SCREWS. SEALANT ON OUTDOOR DUCT SHALL BE RATED FOR SUCH USE.
9. APPLY INSULATION CONTINUOUSLY THROUGH WALLS AND PARTITIONS EXCEPT FIRE RATED ASSEMBLIES. TERMINATE INSULATION AT PENETRATIONS OF FIRE RATED ASSEMBLIES. SEAL INSULATION ENDS WITH VAPOR BARRIER COATING. SEAL AROUND PENETRATION WITH FIRE STOPPING OR FIRE RESISTANT JOINT SEALER.
10. INSTALL FLEXIBLE CONNECTORS AT ALL FANS AND FAN DRIVEN EQUIPMENT. CONNECTORS SHALL HAVE SUFFICIENT SLACK AS TO NOT TRANSMIT VIBRATION TO DUCT.
11. PAINT ALL VISIBLE SHEET METAL DUCTWORK BEHIND GRILLES AND REGISTERS FLAT BLACK.
12. HORIZONTAL AND VERTICAL DUCTS SHALL BE SUPPORTED FROM THE BUILDING STRUCTURE WITH GALVANIZED IRON STRAPS OR RODS. THE SIZE AND SPACING OF HANGERS TO BE PER SMACNA OR AS REQUIRED BY LOCAL CODE.
13. INSULATED FLEXIBLE DUCT SHALL BE UL 181 CLASS 1, 2-PLY VINYL FILM SUPPORTED BY HELICALLY WOUND SPRING STEEL WIRE, FIBROUS GLASS INSULATION, METALLIZED VAPOR BARRIER FILM. DUCT SHALL BE RATED FOR 10 INCHE POSITIVE AND MINUS 1 INCH NEGATIVE PRESSURE AND A TEMPERATURE RANGE FROM MINUS 10 TO 250 DEG F. LENGTH SHALL NOT EXCEED 5' WHEN EXTENDED TO FULL LENGTH. SUPPORT FROM STRUCTURE WITH GALVANIZED STEEL STRAP AND 12" LONG SHEET METAL SADDLE OR PER MANUFACTURER'S INSTRUCTION IF THEY ARE MORE STRINGENT. USE FITTINGS TO MAKE CHANGES OF DIRECTION GREATER THAN 45 DEG OR SUPPORT DUCT SO IT CREATES A MINIMUM CENTERLINE BEND RADIUS OF R/D = 1.5.
14. EXPOSED DUCT SHALL BE PAINTED PER ARCHITECTURAL REQUIREMENTS.

## 15900 CONTROLS

REFER TO SHEET MH702

## 11950 TESTING ADJUSTING AND BALANCING

1. BALANCER SHALL BE A CERTIFIED MEMBER OF NEBB OR AABC WITH A MINIMUM OF 5 YEARS OF EXPERIENCE. REPORTS SHALL BE GENERATED ON AABC OR NEBB APPROVED FORMS. SUBMIT CERTIFICATION ALONG WITH INSTRUMENT TYPE AND CALIBRATION, AND SAMPLE REPORT FORMS FOR SYSTEMS TO BE BALANCED.
2. CUT INSULATION, DUCTS, PIPES, AND EQUIPMENT CABINETS FOR INSTALLATION OF TEST PROBES TO THE MINIMUM EXTENT NECESSARY TO ALLOW ADEQUATE PERFORMANCE OF PROCEDURES. AFTER TESTING AND BALANCING, CLOSE PROBE HOLES AND PATCH INSULATION WITH NEW MATERIAL IDENTICAL TO THOSE REMOVED. RESTORE VAPOR BARRIER AND FINISH ACCORDING TO INSULATION SPECIFICATIONS.
3. MARK EQUIPMENT AND BALANCING DEVICES SETTINGS WITH PAINT OR SUITABLE, PERMANENT IDENTIFICATION MATERIAL, INCLUDING DAMPER-CONTROL POSITIONS, VALVE POSITION INDICATORS, FAN SPEED-CONTROL LEVERS, AND SIMILAR CONTROL DEVICES TO SHOW FINAL SETTINGS.
4. SET HVAC SYSTEM AIRFLOW RATES WITHIN THE FOLLOWING TOLERANCES:
   AIR OUTLETS AND INLETS, MINUS 5 TO PLUS 10 PERCENT.
   COOLING WATER FLOW RATE, MINUS 5 TO PLUS 10 PERCENT.
5. PROVIDE TYPE WRITTEN FINAL REPORT IN 3-RING BINDER, TABULATED AND DIVIDED INTO SECTIONS BY TESTED AND BALANCED SYSTEM. INCLUDE A CERTIFICATION SHEET IN FRONT OF THE BINDER SIGNED AND SEALED BY THE CERTIFIED TESTING AND BALANCING ENGINEER.

## 15073 SEISMIC CONTROL

1. DESIGN MECHANICAL SUPPORTS AND PIPING HANGERS, INCLUDING COMPREHENSIVE ENGINEERING ANALYSIS BY A QUALIFIED PROFESSIONAL ENGINEER REGISTERED IN THE STATE OF HAWAII, USING PERFORMANCE REQUIREMENTS AND DESIGN CRITERIA INDICATED.
2. SEISMIC CONTROL SHALL BE IN ACCORDANCE WITH ASCE/SEI 7.
3. SEISMIC-RESTRAINT LOADING:
   3.1. SITE CLASS "D" AS DEFINED IN THE INTERNATIONAL BUILDING CODE.
   3.2. ASSIGNED SEISMIC USE GROUP "I" AS DEFINED IN THE INTERNATIONAL BUILDING CODE.
   3.3. COMPONENT IMPORTANCE FACTOR: 1.0
   3.4. COMPONENT RESPONSE MODIFICATION FACTOR: 6.0
   3.5. COMPONENT AMPLIFICATION FACTOR: 2.5
   3.6. DESIGN SPECTRAL RESPONSE ACCELERATION AT 0.2 SECOND PERIOD: 1.0 g
   3.7. DESIGN SPECTRAL RESPONSE ACCELERATION AT 1.0 SECOND PERIOD: 0.26 g
4. PRODUCT DATA:
   4.1 ILLUSTRATE AND INDICATE STYLE, MATERIAL, STRENGTH, FASTENING PROVISION, AND FINISH FOR EACH TYPE AND SIZE OF SEISMIC-RESTRAINT COMPONENT USED. RATINGS SHALL BE AS EVALUATED BY AN AGENCY ACCEPTABLE TO AUTHORITIES HAVING JURISDICTION.
   4.2 FOR DELEGATED-DESIGN SUBMITTAL: INCLUDE ANALYSIS DATA SIGNED AND SEALED BY THE QUALIFIED PROFESSIONAL ENGINEER RESPONSIBLE FOR THEIR PREPARATION.
      4.2.1 DESIGN CALCULATIONS: STATIC AND DYNAMIC LOADING DUE TO EQUIPMENT WEIGHT, OPERATING FORCES, AND SEISMIC FORCES.
      4.2.2 SEISMIC-RESTRAINT DETAILS: DESIGN ANALYSIS TO SUPPORT SELECTION AND APPLICATION OF SEISMIC RESTRAINTS, INCLUDING CALCULATIONS OF COMBINED SHEAR AND TENSILE LOADS. INDICATE FABRICATION AND ARRANGEMENT, AND DETAIL ATTACHMENTS TO RESTRAINED ITEMS AND TO STRUCTURE. INDICATE DIRECTIONS AND VALUES OF TRANSMITTED FORCES DURING SEISMIC EVENTS.
      4.2.3 PRE-APPROVAL AND EVALUATION DOCUMENTATION BY AN AGENCY ACCEPTABLE TO AUTHORITIES HAVING JURISTICTION, SHOWING MAXIMUM RATINGS OF RESTRAINT ITEMS AND BASIS FOR APPROVAL (TESTS OR CALCULATIONS.)
   4.3 INFORMATIONAL SUBMITTALS:
      4.3.1. QUALIFICATION DATA FOR PROFESSIONAL ENGINEER AND TESTING AGENCY.
      4.3.2. WELDING CERTIFICATES.
      4.3.3. QUALITY-CONTROL TEST REPORTS AND DATA.

## SYMBOLS

8"ø (A) 255 CFM — TOP: NECKSIZE, (DIFFUSER TYPE FROM SCHEDULE) BOTTOM: AIRFLOW @ DIFFUSER
KEY NOTE
REVISION TAG
ABCD–1234–XXX — EQUIPMENT TAG
THERMOSTAT
THERMOMETER (IN THERMOWELL)
DOUBLE–SPHERE FLEX CONNECTOR
PRESSURE GAUGE
HORIZONTAL CENTRIFUGAL PUMP
MANUAL VOLUME DAMPER IN DUCTWORK
24"X36" — SHEET METAL DUCT (1ST FIGURE SIDE SHOWN)
SUPPLY DIFFUSER
RETURN DIFFUSER/GRILLE

ELBOW DOWN
TEE DOWN
ELBOW UP
TEE UP
BALL VALVE (OPEN)
BALL VALVE (CLOSED)
BUTTERFLY VALVE
CHECK VALVE
FLANGE SET
UNION
CONCENTRIC REDUCER
BALANCING VALVE (CIRCUIT SETTER)
TEST PLUG
2–WAY CONTROL VALVE
3–WAY CONTROL VALVE
WORK POINT

MARK L. FRASER — LICENSED PROFESSIONAL ENGINEER No. 13805 - ME — 4/4/11 — HAWAII, U.S.A.

THIS WORK WAS PREPARED BY ME OR UNDER MY SUPERVISION AND CONSTRUCTION OF THIS PROJECT WILL BE UNDER MY OBSERVATION.

SIGNATURE

4/30/12
EXPIRATION DATE OF LICENSE

# Pan-STARRS PS2 Lure Modifications
# University of Hawaii (PHASE 4)

MAUI, HALEAKALA, HAWAII

2051 W. SUNSET RD. SUITE NO. 101 TUCSON, ARIZONA 85704
TEL. (520) 293-1488 FAX (520) 293-1489 WWW.MSENG.COM
ARCHITECTURE ENGINEERING CONSTRUCTION MANAGEMENT

**Revisions**

| Description | Date |
|---|---|
| 1 | |
| 2 | |
| 3 | |
| 4 | |
| 5 | |
| 6 | |

Drawn: R.B.R.
Checked: M.L.F.
Issue Date: 04–04–11

Drawing Title
HVAC
GENERAL NOTES

Sheet Number
MH001

M3PN 100064

Last Update: 4.4.2011

File: P:\2010\100064\Mechanical\MH001.dwg LAST UPDATE: APR 04, 2011 @ 9:11 AM BY: rr462 LAST REV: PLOT SCALE: 1:1

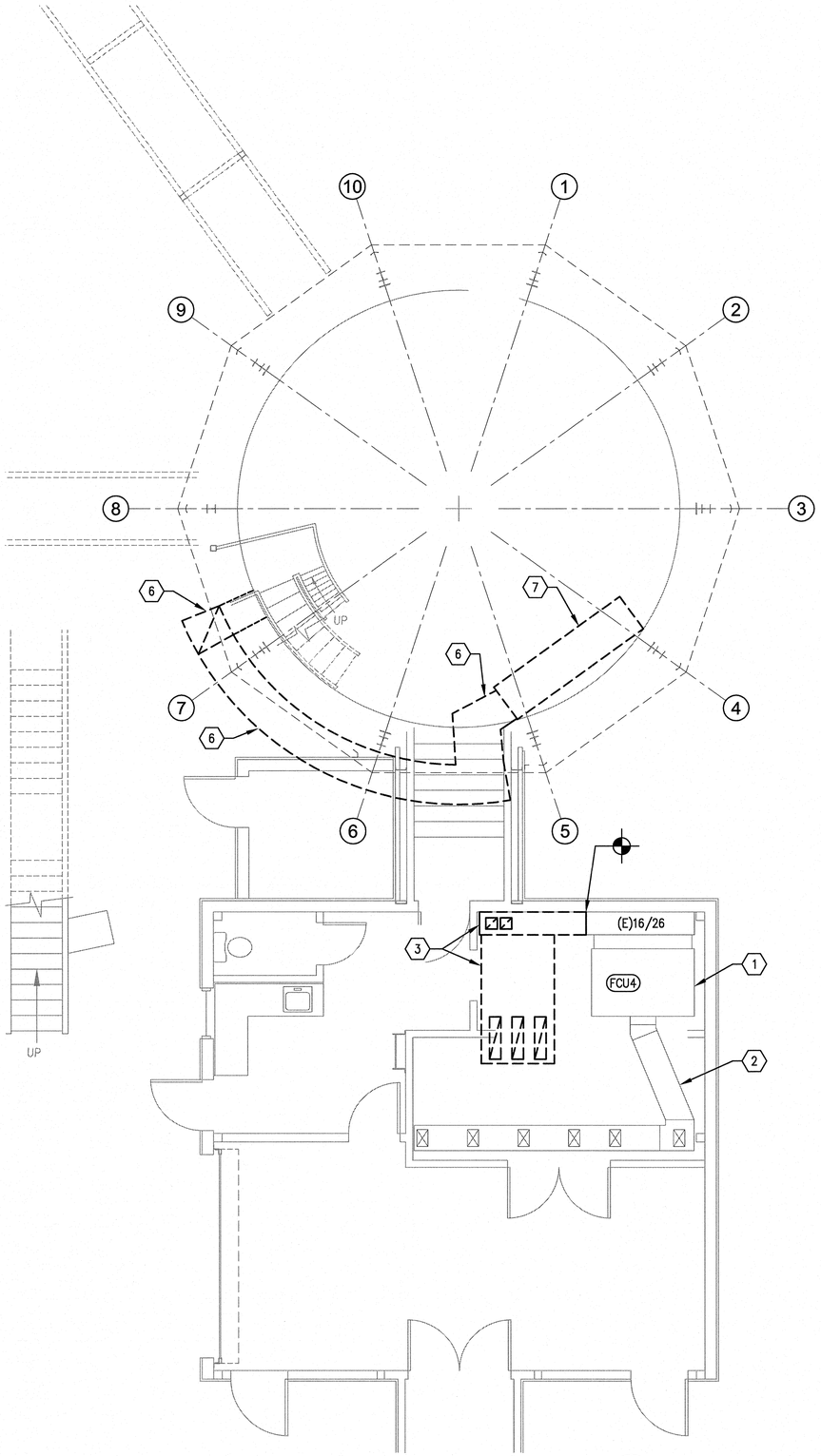


## DEMOLITION FLOOR PLAN

SCALE: 1/4" = 1'-0"

NORTH

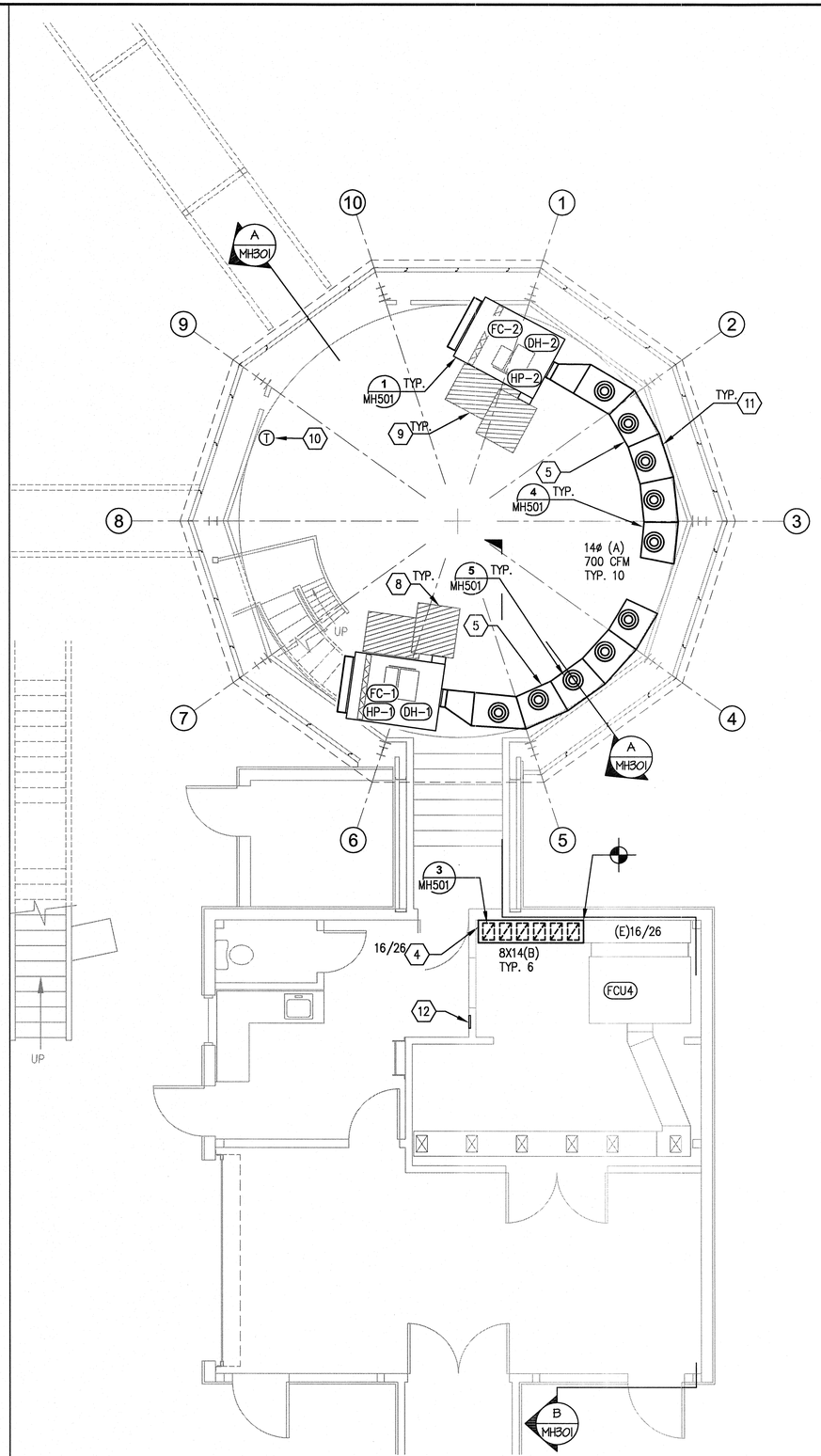


## HVAC FLOOR PLAN

SCALE: 1/4" = 1'-0"

NORTH

## KEY NOTES

1. EXISTING FAN COIL FCU4 TO REMAIN.
2. EXISTING SUPPLY AIR DUCT TO REMAIN.
3. EXISTING RETURN AIR DUCT AND GRILLES - REMOVE BACK TO WORK POINT INDICATED.
4. NEW RETURN AIR DUCT - MATCH EXISTING INSULATION WHERE PRESENT, SEAL TO EXISTING DUCT.
5. NEW SUPPLY AIR DUCT, 24"x24".
6. EXISTING HVAC DUCT - TO BE REMOVED, INCLUDING HANGERS AND SUPPORTS. SEE ARCHITECTURAL PLANS FOR REPAIR OF BUILDING OPENINGS.
7. EXISTING AIR HANDLER - TO BE REMOVED, INCLUDING WIRING AND PIPING. REFER TO MECHANICAL SHEET MP101 AND ELECTRICAL PLANS.
8. MAINTAIN 36"dx30"w CLEARANCE FROM ELECTRICAL CONTROLS.
9. MAINTAIN 30" MIN SERVICE CLEARANCE AS INDICATED.
10. LOCATE SPACE TEMPERATURE SENSOR ON INNER WALL AT 7'-0" AFF.
11. INSULATE DUCT WITH 1-1/2" FIBERGLASS BLANKET INSULATION, WITH FSK JACKET. REFER TO SHEE MH001.
12. LOCATION OF NEW CONTROL SYSTEM INTERFACE PANEL. COORDINATE FINAL LOCATION WITH OWNER.

MARK L. FRASER
LICENSED PROFESSIONAL ENGINEER
No. 13805 - ME
4/4/11
HAWAII, U.S.A.

THIS WORK WAS PREPARED BY ME OR UNDER MY SUPERVISION AND CONSTRUCTION OF THIS PROJECT WILL BE UNDER MY OBSERVATION.

SIGNATURE

4/30/12
EXPIRATION DATE OF LICENSE

# Pan-STARRS PS2 Lure Modifications
# University of Hawaii (PHASE 4)

MAUI, HALEAKALA, HAWAII


2051 W. SUNSET RD.
SUITE NO. 101
TUCSON, ARIZONA 85704
TEL (520) 293-4488
FAX (520) 293-4548
WWW.M3ENG.COM

ARCHITECTURE
ENGINEERING
CONSTRUCTION MANAGEMENT


## Revisions

| | Description | Date |
|---|---|---|
| 1 | | |
| 2 | | |
| 3 | | |
| 4 | | |
| 5 | | |
| 6 | | |

Drawn: R.B.R.
Checked: M.L.F.
Issue Date: 04-04-11

Drawing Title
HVAC

MECHANICAL FLOOR PLAN

Sheet Number
MH101

M3PN 100064

Last Update: 3.8.2011

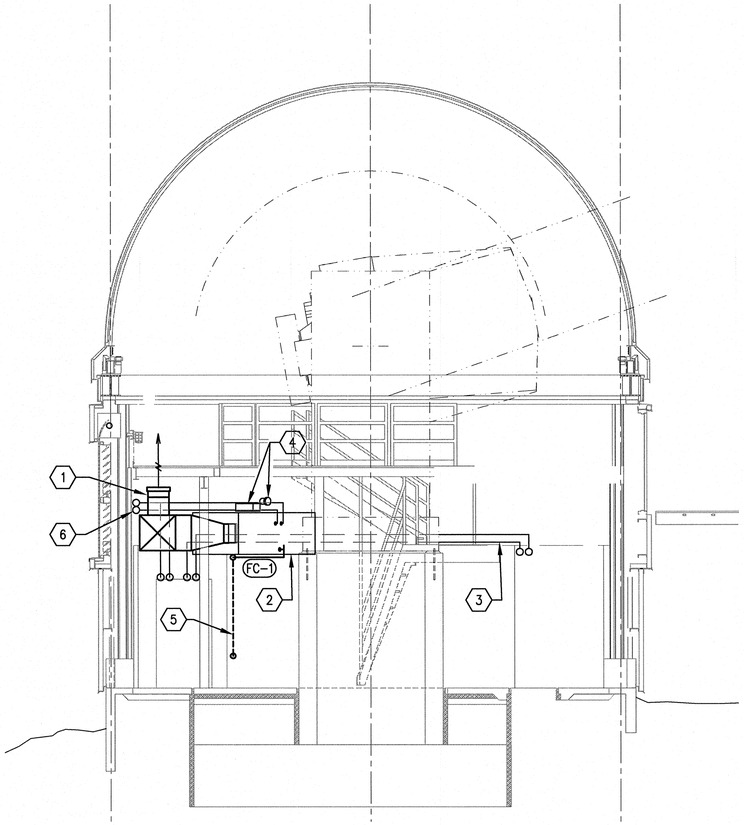


## SECTION A-A
SCALE: 1/4" = 1'-0"

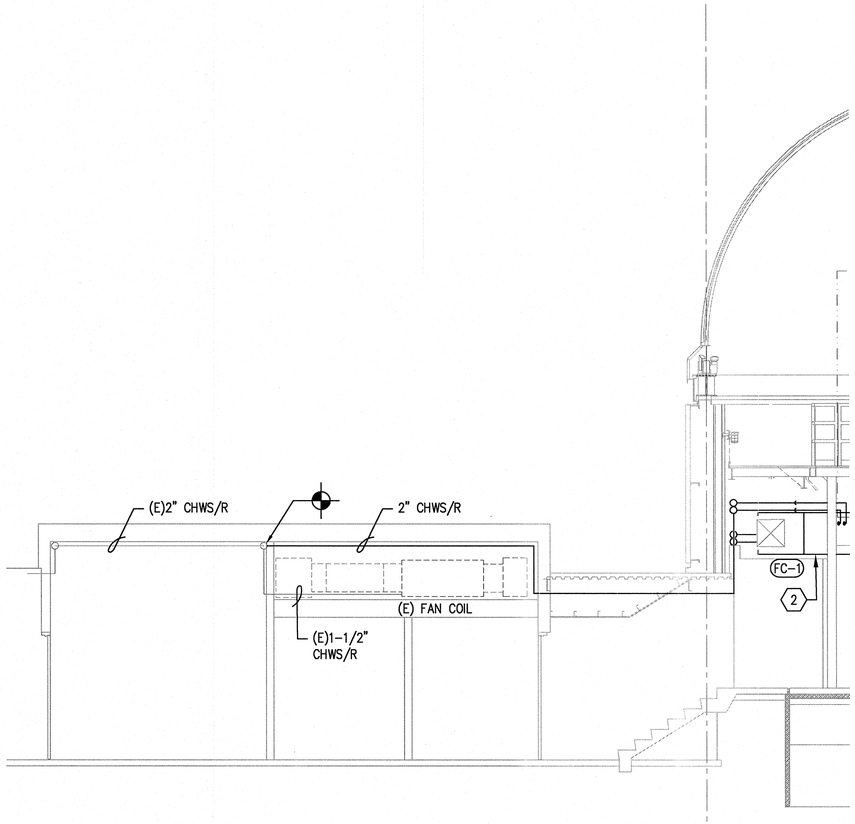


## SECTION B-B
SCALE: 1/4" = 1'-0"

## KEY NOTES

1. DUCT-MOUNTED NOZZLE, DIRECTED THROUGH GRATING TOWARDS DOME. REFER TO DETAIL 5/MH501.
2. BOTTOM OF FAN COIL UNIT SUPPORTS @ 7'-0" AFF (MINIMUM.) REFER TO DETAIL 1/MH501.
3. CHILLED WATER FROM CAMPBELL CHILLER - HOLD TIGHT TO SHELL WALL, APPROX. 8'-4" AFF. REFER TO SHEET MP101.
4. DEFROST HEATER DH-1 AND RECIRCULATION PUMP HP-1.
5. CONDENSATE PIPING - ROUTE FULL SIZE IN PARTITION WALL TO OUTSIDE. REFER TO DETAIL 6 SHEET MH501.
6. CHILLED WATER FROM AIRSTACK CHILLER TO FAN COILS - HOLD TIGHT TO SHELL WALL, APPROX. 10'-0" AFF. REFER TO SHEET MP101.

MARK L. FRASER
LICENSED PROFESSIONAL ENGINEER
No. 13805 - ME
4/4/11
HAWAII, U.S.A.

THIS WORK WAS PREPARED BY ME OR UNDER MY SUPERVISION AND CONSTRUCTION OF THIS PROJECT WILL BE UNDER MY OBSERVATION.

SIGNATURE

4/30/12
EXPIRATION DATE OF LICENSE

# Pan-STARRS PS2 Lure Modifications
# University of Hawaii (PHASE 4)

MAUI, HALEAKALA, HAWAII


2051 W. SUNSET RD.
SUITE NO. 101
TUCSON, ARIZONA 85704
TEL. (520) 293-1488
FAX. (520) 293-8549
WWW.M3ENG.COM

ARCHITECTURE
ENGINEERING
CONSTRUCTION MANAGEMENT


## Revisions

| | Description | Date |
|---|---|---|
| 1 | | |
| 2 | | |
| 3 | | |
| 4 | | |
| 5 | | |
| 6 | | |

Drawn: R.B.R.
Checked: M.L.F.
Issue Date: 04-04-11

Drawing Title
HVAC

MECHANICAL SECTION

Sheet Number
MH301

M3PN 100064

Last Update: 3.1.2011

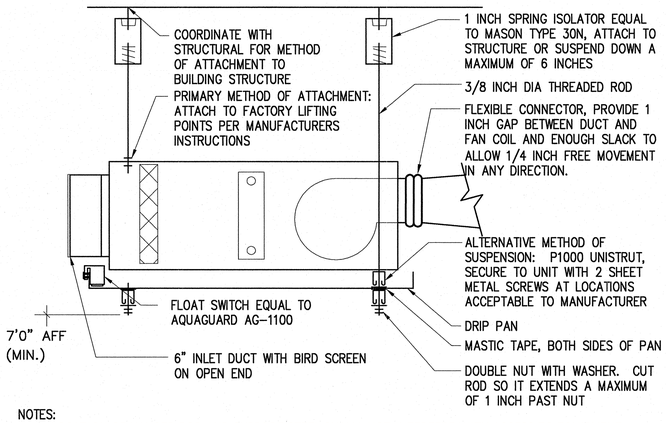


NOTES:
1. LOCATION OF HANGER ROD AND SUPPORT STEEL SHALLL NOT INTERFERE WITH ACCESS TO EQUIPMENT. ALL DOOR SWINGS SHALL BE ABLE TO OPEN PAST 90 DEGREES.
2. MECHANICAL CONTRACTOR IS REPSONSIBLE FOR ATTACHMENT TO BUILDING STRUCTURE, INCLUDING SEISMIC BRACING.
3. FLOAT SWITCH SHALL BE WIRED TO FAN COIL CONTACTS AND SHALL SHUT DOWN FAN COIL WHEN ACTIVATED BY WATER IN PAN. REFER TO SEQUENCE OF OPERATIONS.

## FAN COIL MOUNTING DETAIL 1

SCALE: NTS

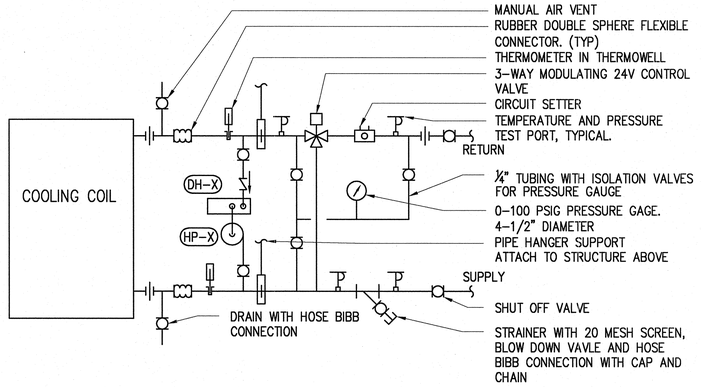


NOTES
1. CONTROL VALVE IS TO FAIL OPEN FOR FULL COOLING.
2. A 5 PSIG PRESSURE LOSS HAS BEEN ALLOWED FOR EACH CONTROL VALVE AND CIRCUIT SETTER.

## COIL DETAIL (WITH DEFROST) 2

SCALE: NTS

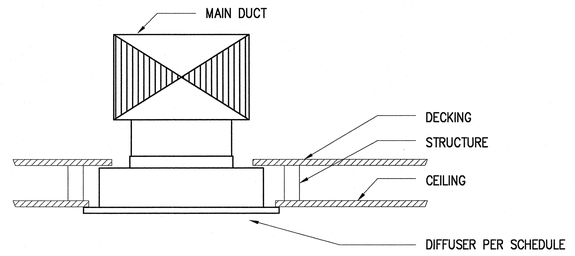


NOTES:
1. COORDINATE LOCATION OF DIFFUSERS AND CONNECTIONS WITH EXISTING BUILDING STRUCTURE

## RETURN GRILLE DETAIL 3

SCALE: NTS

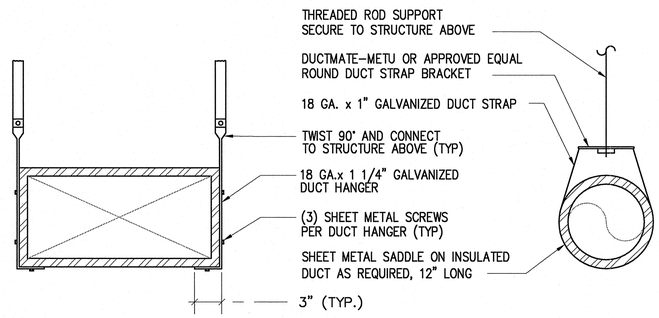


## DUCT HANGER DETAIL 4

SCALE: NTS

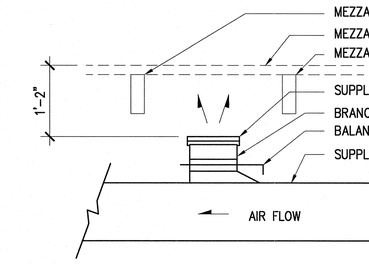


NOTES:
1. SUPPLY NOZZLE DISCHARGES UPWARDS THRU GRATING.
2. COORDINATE LOCATION OF SUPPLY NOZZLES WITH MEZZANINE SUPPORT FRAMING.

## DUCT MOUNTED SUPPLY NOZZLE DETAIL 5

SCALE: NTS

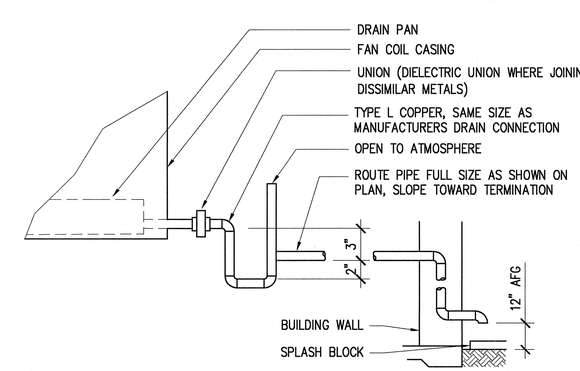


## CONDENSATE TRAP DETAIL 6

NO SCALE

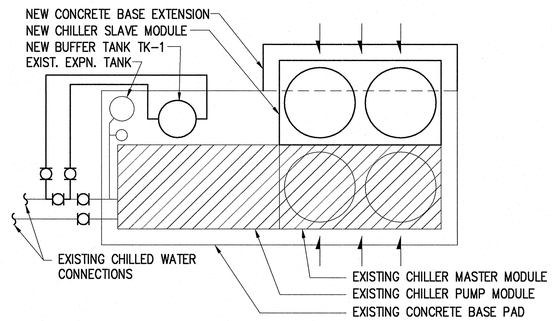


NOTES:
1. INSTALL NEW CHILLER SLAVE MODULE PER MANUFACTURER'S INSTRUCTIONS. MODIFY MASTER MODULE SETTINGS AS REQUIRED FOR PROPER OPERATION.
2. MAINTAIN 36" CLEAR FROM END OF NEW SLAVE MODULE, AND 42" CLEAR FROM AIR INTAKE FACE.
3. EXTEND CONCRETE BASE IF REQUIRED FOR NEW MODULE.

## CHILLER EXPANSION DETAIL 7

SCALE: NTS

# Pan-STARRS PS2 Lure Modifications
# University of Hawaii (PHASE 4)

MAUI, HALEAKALA, HAWAII


2051 W. SUNSET RD. SUITE NO. 101 TUCSON, ARIZONA 85704
TEL (520) 293-1488 FAX (520) 293-2498 WWW.M3ENG.COM
ARCHITECTURE ENGINEERING CONSTRUCTION MANAGEMENT


**Revisions**

| | Description | Date |
|---|---|---|
| 1 | | |
| 2 | | |
| 3 | | |
| 4 | | |
| 5 | | |
| 6 | | |

Drawn: R.B.R.
Checked: M.L.F.
Issue Date: 04-04-11

Drawing Title
HVAC

DETAILS

Sheet Number
MH501

M3PN 100064

Last Update: 4.4.2011

MARK L. FRASER LICENSED PROFESSIONAL ENGINEER No. 13805 - ME 4/4/11 HAWAII, U.S.A.

THIS WORK WAS PREPARED BY ME OR UNDER MY SUPERVISION AND CONSTRUCTION OF THIS PROJECT WILL BE UNDER MY OBSERVATION.

SIGNATURE

4/30/12
EXPIRATION DATE OF LICENSE


File: P:\2010\100064\Mechanical\MH501.dwg LAST UPDATE: APR 04, 2011 @ 8:37 AM BY: rr462 LAST REV: PLOT SCALE: 1:1

## FAN COIL SCHEDULE

| | EQUIPMENT DESIGNATION | FC-1, 2 | FC-1, 2 |
|---|---|---|---|
| GENERAL | SERVICE | SUMMER | WINTER |
| | TOTAL AIRFLOW (ACFM) | 3,500 | 3,500 |
| | OUTSIDE AIR (ACFM) | 0 | 0 |
| | EXTERNAL STATIC PRESSURE (IN WG) | 0.4 | 0.4 |
| | INLET POSITION (REAR, BOTTOM) | REAR | |
| | DISCHARGE POSITION (FRONT, BOTTOM, TOP) | FRONT | |
| | MOTOR (HP) | 2 | |
| | POWER (V/Ø/HZ) | 208/3/60 | |
| | MINIMUM CIRCUIT AMPACITY (AMPS) | 7.8 | |
| | FAN DRIVE TYPE (BELT, DIRECT) | BELT | |
| COOLING | TOTAL NET CAPACITY (BTUH) | 34,600 | 29,900 |
| | SENSIBLE NET CAPACITY (BTUH) | 23,800 | 18,700 |
| | ENTERING AIR TEMPERATURE (DB °F) | 53.2 | |
| | ENTERING AIR TEMPERATURE (WB °F) | 50.5 | |
| | LEAVING AIR TEMPERATURE (DB °F) | 45.9 | |
| | LEAVING AIR TEMPERATURE (WB °F) | 45.6 | |
| | ENTERING WATER TEMPERATURE (°F) | 28 | 28 |
| | LEAVING WATER TEMPERATURE (°F) | 33 | 33 |
| | MAXIMUM FLUID PRESSURE DROP (FT) | 10.0 | 10.0 |
| | PROPYLENE GLYCOL, % | 30 | 30 |
| | FLUID FLOW (GPM) | 15.0 | |
| UNIT | MANUFACTURER | TRANE | |
| | MODEL/SIZE AS SHOWN ON PLAN | BCHC090 | |
| | WEIGHT OF UNIT (LBS) | 305 | |
| | NOTES | 1 THRU 7 | |

NOTES

1. THE UNIT SHALL PROVIDE THE SCHEDULED CAPACITY AT 10,000 FT. ELEVATION AND TEMPERATURES LISTED.
2. SEE PLANS FOR LOCATION OF COIL CONNECTIONS, CONDENSATE OUTLET, AND ACCESS DOORS.
3. PROVIDE WITH SINGLE POINT OF POWER CONNECTION.
4. PROVIDE WITH MERV-8 FILTERS.
5. PROVIDE ONE SPARE BELT FOR UNIT.
6. MANUFACTURER TO SIZE SPRING ISOLATORS FOR OPERATING WEIGHT OF FAN COIL PLUS 30 LBS FOR DRIP TRAY.
7. COOLING SYSTEM WILL OPERATE SUMMER AND WINTER; VALUES SHOWN ARE BASIS OF DESIGN.

## BUFFER TANK SCHEDULE

| | TAG | TK-1 |
|---|---|---|
| GENERAL | SERVICE | CHILLED WATER |
| | FLUID TEMPERATURE (ºF) | 20 - 70 |
| | CAPACITY (GALLONS) | 200 |
| | MAWP (PSIG) | 150 |
| | MATERIAL | STEEL |
| UNIT | MANUF. | HANSON |
| | MODEL/SIZE | WL-264-B |
| | MOUNTING | VERTICAL |
| | DIMENSIONS (INCH) | 30Ø x 72h |
| | WEIGHT (LBS) | 525 |
| | INSULATION (INCH) | 3 |
| | NOTES | 1 - 4 |

NOTES

1. TANK WILL BE USED WITH 30% PROPYLENE GLYCOL SOLUTION.
2. TANK WILL BE PAINTED AND JACKETED FOR OUTDOOR USE.
3. TANK WILL INCLUDE INTERNAL BAFFLE.
4. INSULATION WILL BE FIBERGLASS WITH ALUMINUM JACKET, R-8 MIN.

## AIR DEVICE SCHEDULE

| | EQUIPMENT DESIGNATION | A | B |
|---|---|---|---|
| GENERAL | TYPE | SUPPLY | RETURN |
| | STYLE | NOZZLE | GRID |
| | MATERIAL | STEEL | ALUMINUM |
| | COLOR | WHITE | WHITE |
| | MOUNTING STYLE | DUCT | SURFACE |
| | OBD REQUIRED | NO | NO |
| | MAXIMUM NC AT DESIGNATED FLOW | 32 | 22 |
| UNIT | MANUFACTURER | AIR CONCEPTS | KRUEGER |
| | MODEL AS SHOWN ON PLANS | ANC-14 RD | EGC10 |
| | NOTES | 1 | 1, 2 |

NOTES

1. MANUFACTURER GIVEN IS BASIS OF DESIGN. SUBSTITUTION PERMISSIBLE IF DESIGN CRITERIA ARE MET.
2. PROVIDE WITH MOUNTING FRAME.

## CHILLER SCHEDULE (AIR COOLED)

| | EQUIPMENT DESIGNATION | CH-1 |
|---|---|---|
| GENERAL | SERVICE & FUNCTION | CHILLED WATER |
| | TOTAL CAPACITY, MASTER + SLAVE (TONS) | 19.6 |
| | CAPACITY CONTROL (STEPS) | 4 |
| | EER RATING | 9.1 |
| | REFRIGERANT TYPE | R-407c |
| | ELECTRICAL SERVICE (V/Ø/HZ) | 208/3/60 |
| | TOTAL MINIMUM CIRCUIT AMPS | 139 |
| FLUID | ENTERING WATER TEMP (°F) | 37.0 °F |
| | LEAVING WATER TEMP (°F) | 28.0 °F |
| | PROPYLENE GLYCOL CONCENTRATION (%) | 30 |
| | FLUID FLOW (GPM) | 67 |
| | EXTERNAL PRESSURE DROP (ΔP FT. WG.) | 76 |
| COND | ENTERING CONDENSER AIR TEMP (°F) | 66.0 °F |
| | LEAVING CONDENSER AIR TEMP (°F) | - |
| | AIRFLOW CAPACITY, ACFM | 13,200 |
| | NUMBER OF FANS | 4 |
| UNIT | MANUFACTURER | AIRSTACK |
| | MODEL / SIZE AS SHOWN ON PLANS | ASP-15A |
| | TOTAL WEIGHT OF UNIT (LBS) | - |
| | NOTES | 1 THRU 5 |

NOTES

1. THE UNIT SHALL PROVIDE THE SCHEDULED CAPACITY AT 10,000 FT ELEVATION AND CONDENSING AIR TEMPERATURES LISTED.
2. ADJUST CONTROL SETTINGS IN MASTER MODULE TO ALLOW CONTROL OF NEW SLAVE MODULE.
3. COORDINATE POWER CONNECTION WITH EXISTING CHILLER MODULE ON SITE.
4. PROVIDE CONDENSER HAIL GUARDS FOR NEW MODULE.
5. CHILLER SHALL CONSIST OF ASP-15A(MF) MASTER PLUS ASP-15A(SR) SLAVE MODULE, PLUS ASP-00P PUMP MODULE. MASTER MODULE AND PUMP MODULE EXIST ON SITE - EXPAND WITH NEW SLAVE MODULE. PROVIDE CONCRETE PAD EXTENSION AS REQUIRED. CORRDINATE INSTALLATION OF SLAVE MODULE WITH OWNER.

## PUMP SCHEDULE (CHW)

| | TAG | HP-1, -2 |
|---|---|---|
| GENERAL | SERVICE | DEFROST |
| | FLUID TEMPERATURE (ºF) | 0 TO 80 |
| | CAPACITY (GPM) | 5 |
| | HEAD (FEET W.G.) | 22 |
| UNIT | TYPE | CENTRIFUGAL |
| | MANUF. | BELL & GOSSETT |
| | MODEL/SIZE | PL-30 |
| | MOUNTING | INLINE |
| | MOTOR (HP) | 1/12 |
| | VOLTS/PHASE/HZ | 115/1/60 |
| | SPEED (RPM) | 2,650 |
| | NOTES | 1 - 3 |

NOTES

1. PUMP WILL BE USED WITH 30% PROPYLENE GLYCOL SOLUTION.
2. PUMP WILL BE SUITABLE FOR USE AT ELEVATION OF 10,000 FT.
3. PUMP DRIVER WILL BE SIZED SO AS NOT TO USE MOTOR SERVICE FACTOR.

## WATER HEATER SCHEDULE

| | EQUIPMENT DESIGNATION | DH-1, -2 |
|---|---|---|
| GENERAL | SERVICE | COIL DEFROST |
| | TYPE | TANKLESS |
| | WORKING PRESSURE (PSIG) | 150 |
| | POWER (VOLTS/Ø/HZ) | 208/3/60 |
| | TOTAL CAPACITY (KW) | 18 |
| | FLA | 50 |
| | TEMPERATURE SET POINT (ºF ) | 75 |
| | RECOVERY (GPM @ 49ºF RISE) | 2.5 |
| | ACTIVATION FLOW (GPM) | 0.5 |
| UNIT | MANUFACTURER | KELTECH |
| | MODEL/SIZE | HL 183/208 |
| | NOTES | 1 - 4 |

NOTES

1. TANKLESS UNIT
2. THERMOSTATIC CONTROL
3. FOR USE WITH 30% PROPYLENE GLYCOL SOLUTION
4. UNIT WILL BE SUITABLE FOR USE AT ELEVATION OF 10,000 FT.

# Pan-STARRS PS2 Lure Modifications
# University of Hawaii (PHASE 4)

HAWAII

MAUI, HALEAKALA,


2051 W. SUNSET RD.
SUITE NO. 101
TUCSON, ARIZONA 85704
TEL. (520) 293-1488
FAX. (520) 293-8848
WWW.UMENG.COM

ARCHITECTURE
ENGINEERING
CONSTRUCTION MANAGEMENT


### Revisions

| | Description | Date |
|---|---|---|
| 1 | | |
| 2 | | |
| 3 | | |
| 4 | | |
| 5 | | |
| 6 | | |

Drawn: R.B.R.
Checked: M.L.F.
Issue Date: 04–04–11

Drawing Title
HVAC

SCHEDULES

Sheet Number
MH601

M3PN 100064

Last Update: 4.4.2011

MARK L. FRASER
LICENSED PROFESSIONAL ENGINEER
No. 13805 - ME
4/4/11
HAWAII, USA

THIS WORK WAS PREPARED BY ME OR UNDER MY SUPERVISION AND CONSTRUCTION OF THIS PROJECT WILL BE UNDER MY OBSERVATION.

SIGNATURE

4/30/12
EXPIRATION DATE OF LICENSE


File: P:\2010\100064\Mechanical\MH601.dwg LAST UPDATE: APR 04, 2011 @ 8:53 AM BY: rr462 LAST REV: PLOT SCALE: 1:1

## GENERAL NOTES

1. 1 MBH = 1,000 BTU/HOUR
2. 1 TON = 12,000 BTU/HOUR
3. 1 kW = 3,413 BTU/HOUR

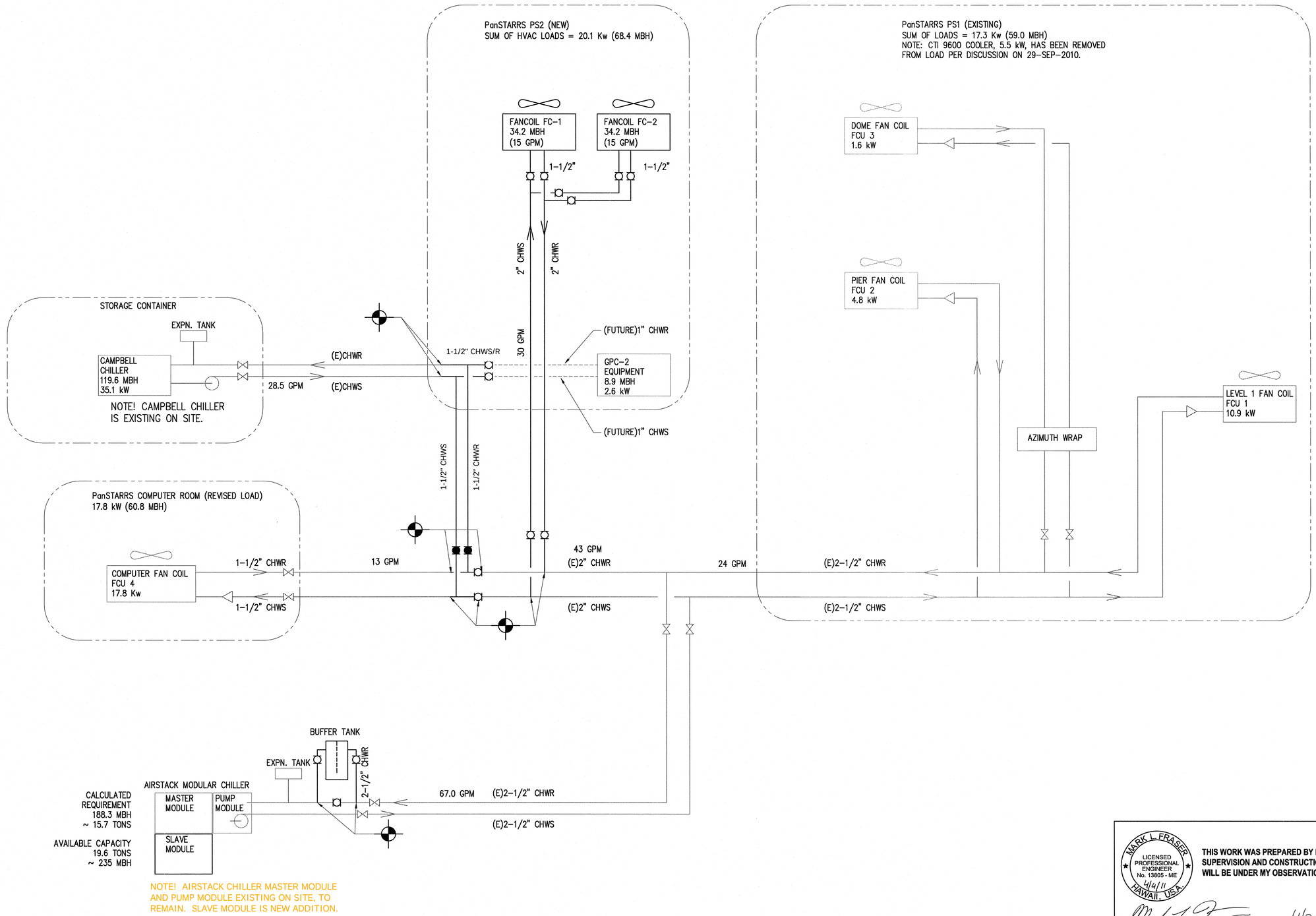


# Pan-STARRS PS2 Lure Modifications
# University of Hawaii
## (PHASE 4)

MAUI, HALEAKALA, HAWAII


2051 W. SUNSET RD.
SUITE NO. 101
TUCSON, ARIZONA 85704
TEL. (520) 293-1488
FAX (520) 293-2849
WWW.M3ENG.COM

ARCHITECTURE
ENGINEERING
CONSTRUCTION MANAGEMENT


### Revisions

| | Description | Date |
|---|---|---|
| 1 | | |
| 2 | | |
| 3 | | |
| 4 | | |
| 5 | | |
| 6 | | |

Drawn: R.B.R.
Checked: M.L.F.
Issue Date: 04-04-11

Drawing Title
HVAC

CHILLED WATER SCHEMATIC

Sheet Number
MH701

M3PN 100064

Last Update: 3.2.2011

MARK L. FRASER
LICENSED PROFESSIONAL ENGINEER
No. 13805 - ME
4/4/11
HAWAII, USA

THIS WORK WAS PREPARED BY ME OR UNDER MY SUPERVISION AND CONSTRUCTION OF THIS PROJECT WILL BE UNDER MY OBSERVATION.

SIGNATURE

4/30/12
EXPIRATION DATE OF LICENSE

## SEQUENCE OF OPERATION

FAN COILS FC-1 AND FC-2

1. THE FANCOIL SYSTEM SHALL BE ENABLED / DISABLED BY OWNER AT USER INTERFACE.
2. THE FAN STATUS SHALL BE MONITORED AND ALARM MESSAGE PROVIDED IF THE FAN FAILS.
3. THE SPACE TEMPERATURE SET POINT SHALL BE SET DAILY BY OWNER AT THE USER INTERFACE.
4. ALL CONTROL DEVICES ON THE CHILLED WATER SYSTEM MUST FUNCTION EFFECTIVELY ACROSS THE FULL RANGE OF TEMPERATURES AND VISCOSITIES ENCOUNTERED.
5. THE CHILLED WATER CONTROL VALVE SHALL MODULATE IN COOLING MODE AS REQUIRED TO MAINTAIN THE SPACE AIR TEMPERATURE SET POINT. IF SPACE TEMPERATURE IS MORE THAN +/- 3$^{O}$F FROM SET POINT AN ALARM MESSAGE SHALL BE PROVIDED. WHEN THE SYSTEM IS INITIALZED AND THE SPACE TEMPERATURE IS MORE THAN 3$^{O}$F FROM THE SET POINT, THE ALARM SHALL BE DISABLED FOR 30 MINUTES.
6. AFTER THE FAN COIL UNIT HAS BEEN IN OPERATION IN COOLING MODE FOR 30 SECONDS, THE PRESSURE DROP ACROSS THE COOLING COIL SHALL BE MEASURED BY THE EMCS AS A BASELINE. THEREAFTER, THE EMCS SHALL MONITOR AIRSIDE PRESSURE DROP CONTINUOUSLY AND COMPARE TO THE BASELINE READING. IF THE PRESSURE DROP ACROSS THE COOLING COIL RISES TO 125% OF THE INITIAL PRESSURE DROP, THE FOLLOWING COIL DEFROST STEPS SHALL BE IMPLEMENTED:
   a. LOW-TEMPERATURE WATER CONTROL VALVE IS COMMANDED TO FULL BYPASS (NO FLOW THROUGH COIL).
   b. DEFROST PUMP IS ENERGIZED. IF THE PUMP FAILS TO START AN ALARM MESSAGE SHALL BE PROVIDED.
   c. FAN IS DE-ENERGIZED AFTER 2 MINUTES.
   d. DEFROST WATER HEATER IS ENERGIZED.
   e. HEATED WATER IS CIRCULATED THROUGH THE COIL FOR 6 MINUTES.
   f. IF COIL RETURN WATER TEMPERATURE HAS NOT REACHED 70$^{O}$F WITHIN 4 MINUTES, AN ALARM MESSAGE SHALL BE PROVIDED.
   g. DEFROST HEATER SHALL BE DE-ENERGIZED AFTER THE TIMED CYCLE.
   h. DEFROST PUMP SHALL BE DE-ENERGIZED AFTER THE TIMED CYCLE.
   i. FAN SHALL BE RE-ENERGIZED TO DRY THE COIL.
   j. AFTER 180 SECONDS, LOW-TEMPERATURE WATER CONTROL VALVE IS RE-ENABLED.
7. DEFROST CYCLE SHALL NOT OCCUR WHEN THE FAN COIL SYSTEM IS DISABLED.
8. WHEN ONE FAN COIL IS IN DEFROST MODE OR OTHERWISE NOT OPERATIONAL, THE OTHER FAN COIL SHALL OPERATE TO MAINTAIN SPACE TEMPERATURE. WHEN BOTH FAN COILS ARE IN OPERATIONAL MODE, THEY SHALL BE OPERATED TOGETHER TO MAINTAIN SPACE TEMPERATURE.
9. IF WATER IS DETECTED BY THE DRIP PAN FLOAT SWITCH, THE ASSOCIATED FAN SHALL BE SHUT DOWN AND AN ALARM MESSAGE SHALL BE PROVIDED.
10. DISCHARGE AIR TEMPERATURE OF EACH UNIT SHALL BE MAINTAINED AT THE SAME TEMPERATURE IN COOLING MODE. IF DISCHARGE AIR TEMPERATURE OF EITHER UNIT IS 3$^{O}$F ABOVE OR BELOW THAT OF THE OTHER UNIT, AN ALARM MESSAGE WILL BE PROVIDED.

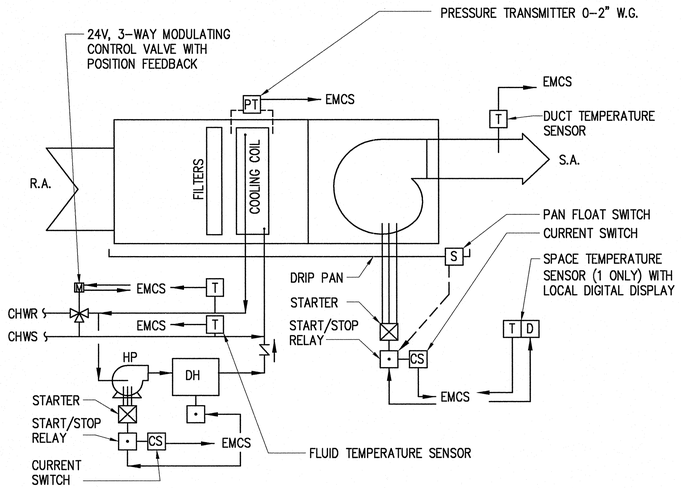


FC-1 & FC-2 CONTROL SCHEMATIC

SCALE: NTS

## CONTROL NOTES

1. PROVIDE A CONTROL SYSTEM (EMCS) FOR THE NEW FAN COIL UNITS (FC-1 AND FC-2) AND ASSOCIATED EQUIPMENT (HP-1, HP-2, DH-1, DH-2) AS OUTLINED IN THE SCHEMATIC AND PLANS. SYSTEM SHALL INCLUDE A WALL-MOUNTED TOUCH SCREEN USER INTERFACE WITH BacNET COMMUNICATION, SIMILAR TO DELTA CONTROLS DHMI-7E. SYSTEM SHALL BE CAPABLE OF FUTURE CONNECTION TO EXISTING "PC02 OVER ETHERNET" CONTROL SYSTEM. COORDINATE ALL REQUIREMENTS WITH THE OWNER.

1.1. CHILLER IS CONTROLLED BY OWNER'S EXISTING EMCS. WHEN ADDING THE CHILLER SLAVE MODULE, MODIFY SETTINGS IN CHILLER MASTER MODULE AS REQUIRED.

2. THE CONTROL SYSTEM SHALL INCLUDE MULTIPLE SECURITY LEVELS FOR SYSTEM ACCESS. ALL PROGRAMS, KEYS, AND PASSWORDS REQUIRED TO RUN THE PROGRAM SHALL BE GIVEN TO THE OWNER UPON COMPLETION OF INSTALLATION.
3. SYSTEM SHALL BE CAPABLE OF FUTURE EXPANSION TO INCLUDE AT LEAST 2 ADDITIONAL FAN COIL UNITS.
4. IF A ZONE OR SYSTEM IS ACCESSED A GRAPHIC REPRESENTATION OF IT SHALL BE DISPLAYED ALONG WITH ALL CONTROL POINTS.
5. INPUTS AND OUTPUTS SHALL HAVE DESCRIPTIVE NAMES THAT EXPLAIN THEIR FUNCTIONS.
6. COMMENTS EXPLAINING WHAT THE CODE IS TRYING TO ACHIEVE AND HOW IT IS BEING ACHIEVED SHALL BE USED THROUGHOUT THE PROGRAMS.
7. PROVIDE ALL CONTROL DEVICES AND PROGRAMMING REQUIRED TO PERFORM THE FUNCTIONS DESCRIBED IN THE SEQUENCE OF OPERATION AND ON THE CONTROL DIAGRAMS.
8. COORDINATE ALL CONTROL VALVES, SENSOR WELLS, AND TEES IN PIPING AS REQUIRED. SYSTEM SHALL FUNCTION AT THE FULL RANGE OF TEMPERATURES AND VISCOSITIES ENCOUNTERED.
9. COORDINATE ALL FAN COIL COMMUNICATION DEVICES WITH THE FAN COIL MANUFACTURER.
10. COORDINATE ALL ELECTRICAL DEVICES WITH THE ELECTRICAL PLANS AND SPECIFICATIONS.
11. ALL SET POINTS SHALL BE DISPLAYED AND BE ADJUSTABLE. ALL SET POINTS THAT CAN BE RESET SHALL HAVE THE MOST CURRENT SET POINT DISPLAYED.
12. SPACE TEMPERATURE SET POINT SHALL BE ADJUSTABLE BETWEEN 25$^{O}$ F AND 70$^{O}$ F AS A MINIMUM RANGE.
13. ALL OPERATING SCHEDULES SHALL BE DISPLAYED AND BE ADJUSTABLE.
14. ALL ALARM LIMITS SHALL BE DISPLAYED AND BE ADJUSTABLE. DRY CONTACT ALARM OUTPUTS SHALL BE AVAILABLE FOR CONNECTION TO OWNER'S EXISTING CONTROL SYSTEM. CONNECTION TO EXISTING SYSTEM SHALL BE BY OTHERS.
15. LOGS SHALL BE PROVIDED OF FAN COIL AND DEFROST SYSTEM RUN TIMES.
16. ALL ALARMS SHALL BE LOGGED WITH THE DATA AND TIME OF THE ALARM ALONG WITH A DESCRIPTION.
17. CONTROLS CONTRACTOR SHALL PROVIDE AND INSTALL ALL CONTROL WIRING AND CONDUIT AS REQUIRED. COORDINATE WITH ELECTRICAL PLANS.
18. ALL WIRING SHALL BE IN CABLE TRAY OR CONDUIT PER ELECTRICAL SPECIFICATIONS. CABLE IS TO BE ROUTED PARALLEL AND PERPENDICULAR TO BUILDING LINES.
19. CONTROLS CONTRACTOR SHALL DEMONSTRATE TO THE GENERAL CONTRACTOR THAT ALL SEQUENCES ARE BEING PERFORMED AS DESCRIBED. AFTER DEMONSTRATION TO THE GENERAL CONTRACTOR, THE CONTROLS AND GENERAL CONTRACTORS SHALL DEMONSTRATE THE SAME SEQUENCES TO THE OWNER.
20. THE FACILITY TYPICALLY OPERATES SEVEN DAYS PER WEEK AND 24 HOURS PER DAY. COORDINATE WITH OWNER FOR ANY PIECES OF EQUIPMENT WHICH REQUIRE A DIFFERENT SCHEDULE.
21. AN ALLOWANCE OF 5 PSIG PRESSURE DROP ACROSS THE CONTROL VALVE HAS BEEN PROVIDED. THE CHILLED WATER BRINE SHALL BE 30% PROPYLENE GLYCOL IN WATER; TEMPERATURE WILL VARY FROM 28$^{O}$ F TO 50$^{O}$ F. IF NEEDED PROVIDE 2 STAGED CONTROL VALVES TO MAINTAIN PROPER FLOW CONTROL.

## 15900 – CONTROLS

1. REPORTING ACCURACY AND STABILITY OF CONTROL:
   1.1. MEASURE AND REPORT VALUES WITHIN TOLERANCES AS FOLLOWS:
      a. WATER TEMPERATURE: PLUS OR MINUS 1/10 DEG F (0.18$^{O}$ C).
      b. SPACE TEMPERATURE: PLUS OR MINUS 1/10 DEG F (0.18$^{O}$ C).
      c. DUCTED AIR TEMPERATURE: PLUS OR MINUS 1/10 DEG F (0.18$^{O}$ C).
      d. ELECTRICAL: PLUS OR MINUS 2 PERCENT OF READING.
   1.2. MAINTAIN MEASURED VARIABLES WITHIN TOLERANCES AS FOLLOWS:
      a. SPACE TEMPERATURE: PLUS OR MINUS 1/2 DEG F (0.25$^{O}$ C).
2. PRODUCT DATA: INCLUDE MANUFACTURER'S TECHNICAL LITERATURE FOR EACH CONTROL DEVICE. INDICATE DIMENSIONS, CAPACITIES, PERFORMANCE CHARACTERISTICS, ELECTRICAL CHARACTERISTICS, FINISHES FOR MATERIALS, AND INSTALLATION AND STARTUP INSTRUCTIONS FOR EACH TYPE OF PRODUCT INDICATED.
   a. CONTROL SYSTEM HARDWARE: BILL OF MATERIALS OF EQUIPMENT INDICATING QUANTITY, MANUFACTURER, AND MODEL NUMBER. INCLUDE TECHNICAL DATA FOR INTERFACE EQUIPMENT, CONTROL UNITS, TRANSDUCERS/TRANSMITTERS, SENSORS, ACTUATORS, VALVES, RELAYS/SWITCHES, CONTROL PANELS, AND OPERATOR INTERFACE EQUIPMENT.
   b. CONTROL SYSTEM SOFTWARE: INCLUDE TECHNICAL DATA FOR OPERATING SYSTEM SOFTWARE, OPERATOR INTERFACE, COLOR GRAPHICS, AND OTHER THIRD-PARTY APPLICATIONS.
   c. CONTROLLED SYSTEMS: INSTRUMENTATION LIST WITH ELEMENT NAME, TYPE OF DEVICE, MANUFACTURER, MODEL NUMBER, AND PRODUCT DATA. INCLUDE WRITTEN DESCRIPTION OF SEQUENCE OF OPERATION INCLUDING SCHEMATIC DIAGRAM.
3. SHOP DRAWINGS: DETAIL EQUIPMENT ASSEMBLIES AND INDICATE DIMENSIONS, WEIGHTS, LOADS, REQUIRED CLEARANCES, METHOD OF FIELD ASSEMBLY, COMPONENTS, AND LOCATION AND SIZE OF EACH FIELD CONNECTION.
   a. BILL OF MATERIALS OF EQUIPMENT INDICATING QUANTITY, MANUFACTURER, AND MODEL NUMBER.
   b. SCHEMATIC FLOW DIAGRAMS SHOWING FANS, PUMPS, COILS, DAMPERS, VALVES, AND CONTROL DEVICES.
   c. WIRING DIAGRAMS: POWER, SIGNAL, AND CONTROL WIRING.
   d. DETAILS INCLUDING CONTROLS, INSTRUMENTS, AND LABELING.
   e. WRITTEN DESCRIPTION OF SEQUENCE OF OPERATION.
   f. SCHEDULE OF VALVES INCLUDING FLOW CHARACTERISTICS.
   g. CONTROL SYSTEM HARDWARE:
      1) WIRING DIAGRAMS FOR CONTROL UNITS WITH TERMINATION NUMBERS.
      2) SCHEMATIC DIAGRAMS AND FLOOR PLANS FOR FIELD SENSORS AND CONTROL HARDWARE.
      3) SCHEMATIC DIAGRAMS FOR CONTROL, COMMUNICATION, AND POWER WIRING, SHOWING WIRING BETWEEN OPERATOR WORKSTATION AND CONTROL UNIT LOCATIONS.
   h. CONTROL SYSTEM SOFTWARE: LIST OF COLOR GRAPHICS INDICATING MONITORED SYSTEM, DATA (CONNECTED AND CALCULATED) POINT ADDRESSES, OUTPUT SCHEDULE, AND OPERATOR NOTATIONS.
   i. CONTROLLED SYSTEMS:
      1) SCHEMATIC DIAGRAMS OF EACH CONTROLLED SYSTEM WITH CONTROL POINTS LABELED AND CONTROL ELEMENTS GRAPHICALLY SHOWN, WITH WIRING.
      2) SCALED DRAWINGS SHOWING MOUNTING, ROUTING, AND WIRING OF ELEMENTS INCLUDING BASES AND SPECIAL CONSTRUCTION.
      3) WRITTEN DESCRIPTION OF SEQUENCE OF OPERATION INCLUDEING SCHEMATIC DIAGRAM.
      4) POINTS LIST.

| INSTRUMENTATION POINTS LIST | ANALOG | | BINARY | |
|---|---|---|---|---|
| | INPUT | OUTPUT | INPUT | OUTPUT |
| **FAN COILS FC-1, FC-2** | | | | |
| ENABLE / DISABLE | | | | X |
| TEMPERATURE, CHILLED WATER OUT | X | | | |
| TEMPERATURE, CHILLED WATER IN | X | | | |
| PUMP RUN, CHILLED WATER | | | X | X |
| DEFROST HEATER, CHILLED WATER | | | | X |
| FAN RUN | | | X | X |
| SPACE TEMPERATURE | X | | | |
| DUCT TEMPERATURE | X | | | |
| CONTROL VALVE, CHILLED WATER | X | X | | |
| DIFFERENTIAL AIR PRESSURE, COIL | X | | | |
| | | | | |

MARK L. FRASER
LICENSED PROFESSIONAL ENGINEER
No. 13805 - ME
4/4/11
HAWAII, USA

THIS WORK WAS PREPARED BY ME OR UNDER MY SUPERVISION AND CONSTRUCTION OF THIS PROJECT WILL BE UNDER MY OBSERVATION.

SIGNATURE

4/30/12
EXPIRATION DATE OF LICENSE

# Pan-STARRS PS2 Lure Modifications
# University of Hawaii (PHASE 4)

MAUI, HALEAKALA, HAWAII


2051 W. SUNSET RD.
SUITE NO. 101
TUCSON, ARIZONA 85704
TEL (520) 293-1488
FAX (520) 293-3449
WWW.SWBR.COM

ARCHITECTURE
ENGINEERING
CONSTRUCTION MANAGEMENT


**Revisions**

| Description | Date |
|---|---|
| 1 | |
| 2 | |
| 3 | |
| 4 | |
| 5 | |
| 6 | |

Drawn: R.B.R.
Checked: M.L.F.
Issue Date: 04-04-11

Drawing Title
HVAC CONTROL NOTES & SEQUENCE

Sheet Number
MH702

M3PN 100064

Last Update: 3.1.2011

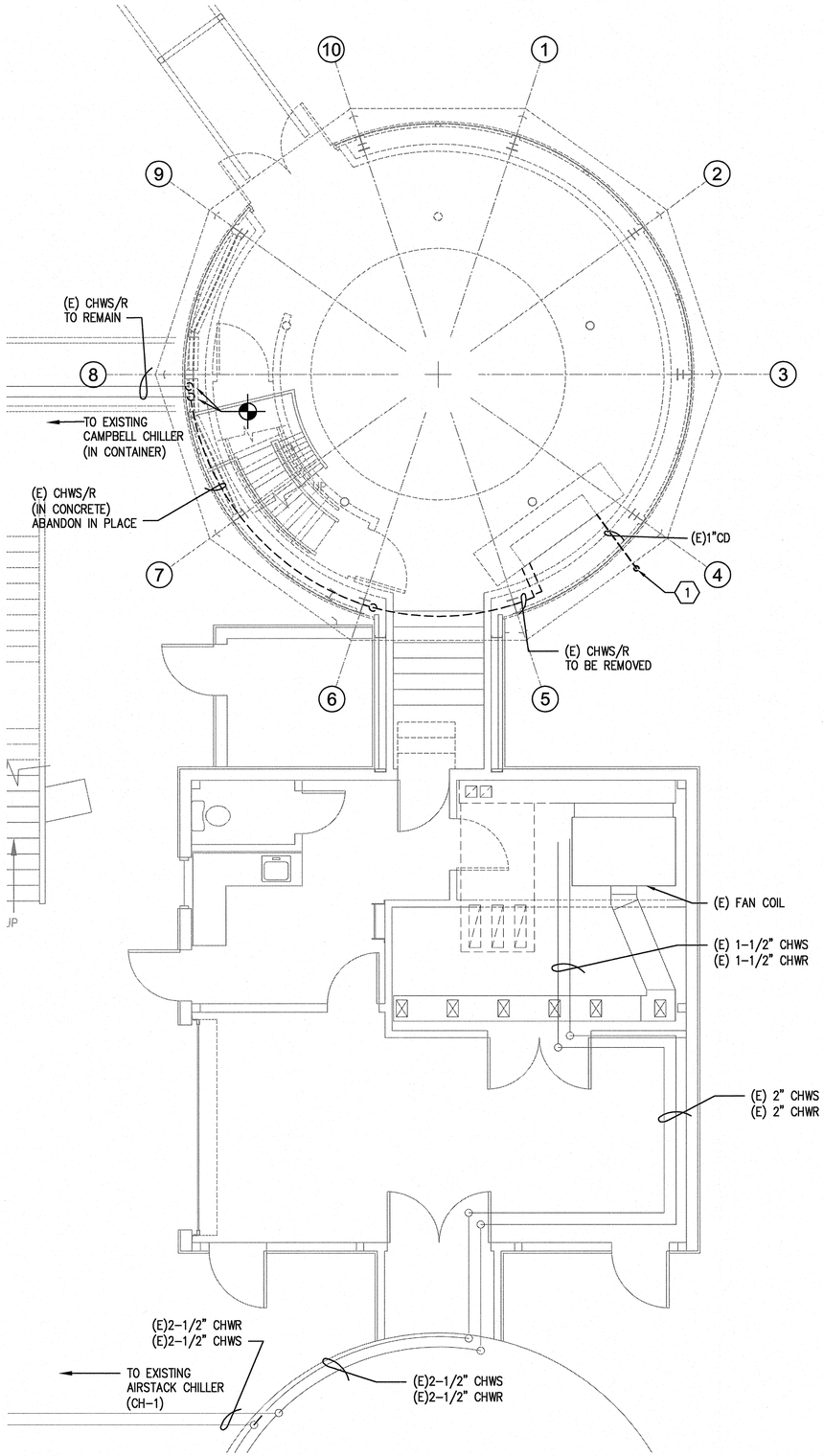


## HVAC PIPING DEMOLITION PLAN

SCALE: 1/4" = 1'-0"

NORTH

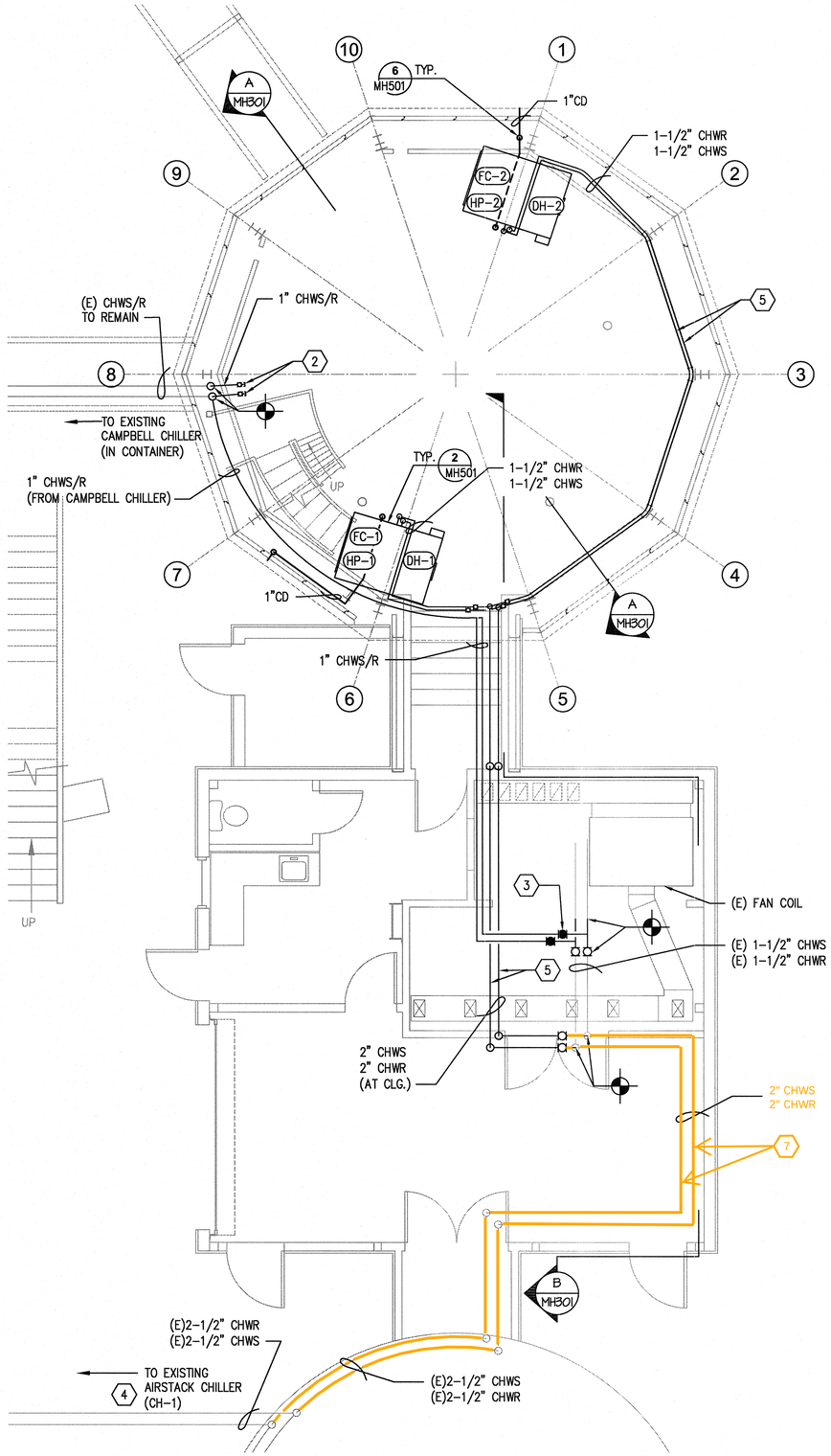


## HVAC PIPING GROUND FLOOR PLAN

SCALE: 1/4" = 1'-0"

NORTH

## KEY NOTES

1. REMOVE EXISTING CONDENSATE DRAIN.
2. SUPPORT AT MEZZANINE DECK; TERMINATE WITH BALL VALVES AND CAP FOR FUTURE CONNECTION TO PanSTARRS 2 EQUIPMENT.
3. FULL-PORT BALL VALVES TO ALLOW USE OF EXISTING CAMPBELL CHILLER AS BACKUP FOR COMPUTER ROOM COOLING.
4. REFER TO DETAIL 7 OF SHEET MH501 FOR CHILLER UPGRADE.
5. INCLUDE MANUAL HIGH-POINT AIR VENTS.
6. REMOVE EXISTING CHWS/R LINES. ABANDON IN PLACE PORTIONS OF LINES IN CONCRETE.
7. REPLACE EXISTING 1 - 1/2" CHW LINES WITH 2" CHW LINES

## GENERAL NOTES

1. INSTALL AND INSULATE CHILLED WATER SUPPLY AND RETURN PIPING AS OUTLINED ON SHEET MH101.
2. DO NOT INTERRUPT CHILLED WATER SERVICE WITHOUT WRITTEN PERMISSION OF OWNER. NOTIFY OWNER AT LEAST TWO (2) DAYS IN ADVANCE OF INTENDED SERVICE INTERRUPTION.
3. COORDINATE ALL ROUTING AND TERMINATION POINTS WITH OWNER PRIOR TO INSTALLATION.

MARK L. FRASER
LICENSED PROFESSIONAL ENGINEER
No. 13805 - ME
4/4/11
HAWAII, USA

THIS WORK WAS PREPARED BY ME OR UNDER MY SUPERVISION AND CONSTRUCTION OF THIS PROJECT WILL BE UNDER MY OBSERVATION.

SIGNATURE

4/30/12
EXPIRATION DATE OF LICENSE

# Pan-STARRS PS2 Lure Modifications
# University of Hawaii (PHASE 4)

MAUI, HALEAKALA, HAWAII


2051 W. SUNSET RD.
SUITE NO. 101
TUCSON, ARIZONA 85704
TEL (520) 293-3486
FAX (520) 293-3488
WWW.M3ENG.COM

ARCHITECTURE
ENGINEERING
CONSTRUCTION MANAGEMENT


## Revisions

| | Description | Date |
|---|---|---|
| 1 | | |
| 2 | | |
| 3 | | |
| 4 | | |
| 5 | | |
| 6 | | |

Drawn: R.B.R.
Checked: M.L.F.
Issue Date: 04-04-11

Drawing Title
HVAC
MECHANICAL PIPING PLAN

Sheet Number
MP101

M3PN 100064

Last Update: 4.4.2011


File: P:\2010\100064\Mechanical\MP101.DWG LAST UPDATE: APR 04, 2011 @ 8:33 AM BY: rr462 LAST REV: PLOT SCALE: 1:1

# I. GENERAL

A. GENERAL REFERENCE:
ALL WORK MUST CONFORM TO THE REQUIREMENTS OF THE HAWAII BUILDING CODE, 2006 EDITION, INTERNATIONAL BUILDING CODE 2006 EDITION AND OSHA, LATEST EDITION.

B. SPECIAL INSPECTION IS REQUIRED FOR THE FOLLOWING WITH INSPECTION FREQUENCIES PER IBC 2006 TABLE 1704.3 & TABLE 1404.4 W/ LOCAL AMENDMENTS. SPECIAL INSPECTION AGENCY (AGENCIES) SHALL BE CONTRACTED BY CONTRACTOR.

| | YES | NO | NA |
|---|---|---|---|
| 1. CONCRETE | ☒ | ☐ | ☐ |
| 2. BOLTS INSTALLLED IN CONCRETE | ☒ | ☐ | ☐ |
| 3. SPECIAL MOMENT RESISTING CONCRETE FRAME | ☐ | ☐ | ☒ |
| 4. REINFORCING STEEL AND PRE-STRESSING STEEL TENDONS | ☐ | ☐ | ☒ |
| 5. FIELD WELDING | ☒ | ☐ | ☐ |
| 6. HIGH STRENGTH BOLTING | ☒ | ☐ | ☐ |
| 7. STRUCTURAL MASONRY | ☐ | ☐ | ☒ |
| 8. REINFORCED BYPSUM CONCRETE | ☐ | ☐ | ☒ |
| 9. INSULATION CONCRETE FILL | ☐ | ☐ | ☒ |
| 10. SPRAY APPLIED FIRE ROOFING | ☐ | ☐ | ☒ |
| 11. DRILLED PIERS FOR HYDRAULIC LIFT | ☐ | ☐ | ☒ |
| 12. SHOTCRETE | ☐ | ☐ | ☒ |
| 13. SPECIAL GRADING, EXCAVATION & FILLING | ☐ | ☐ | ☒ |
| 14. SMOKE CONTROL SYSTEMS | ☐ | ☒ | ☐ |
| 15. EPOXY/EXPANSION BOLTS | ☐ | ☐ | ☒ |
| | ☒ | ☐ | ☐ |

C. DESIGN LOADS:

1. ROOF LIVE LOAD - 20 PSF (REDUCIBLE)
2. SUPERIMPOSED ROOF DEAD LOAD - 15 PSF
3. FLOOR LIVE LOAD - 100 PSF (NON-REDUCIBLE)
   FLOOR PARTITION LOAD - 20 PSF (10 PSF FOR SEISMIC)
4. HALLWAYS, STAIRS, BALCONIES - 100 PSF (NON-RED)
5. HYDRAULIC LIFT:
   MAX. LIVE LOAD 10,000 LBS.
6. SLABS ON GRADE:
   4" SLABS 100 PSF (LIGHT COMMERCIAL)
   6" SLABS 400 PSF (LIGHT INDUSTRIAL)
7. DESIGN OCCUPANCY CATEGORY II
8. WIND LOAD:
   BASIC WIND SPEED = 105 MPH (3 SEC. GUST)
   $I_w$ = 1.0
   EXPOSURE "C"
9. SEISMIC DESIGN:
   $I_E$ = 1.0
   $S_s$ = 1.0g
   $S_1$ = 0.26g
   SEISMIC DESIGN CATEGORY "D"
   SOIL SITE CLASS "D"
   BASIC SEISMIC FORCE RESISTING SYSTEM:
   ORDINARY CONCENTRICALLY BRACED FRAMES (OCBF), R = 3.25
   ANALYSIS PROCEDURE: EQUIVALENT LATERAL FORCE PROCEDURE

1

10. SOILS: (ASSUMED VALUES)
    BEARING PRESSURE: 2000 PSF (ON SITE SOILS, CLASS 4 PER IBC TABLE 1804.1)
    PASSIVE PRESSURE - 100 PSF/FT

1

D. THE STRUCTURAL DRAWINGS AND SPECIFICATIONS REPRESENT THE FINISHED STRUCTURE. THEY DO NOT INDICATE THE METHOD OF CONSTRUCTION. THE CONTRACTOR SHALL PROVIDE ALL MEASURES NECESSARY TO PROTECT THE STRUCTURE DURING CONSTRUCTION. SUCH MEASURES SHALL INCLUDE, BUT NOT BE LIMITED TO, BRACING, SHORING OF LOADS DUE TO CONSTRUCTION EQUIPMENT, ETC. OBSERVATION VISITS TO THE SITE BY THE STRUCTURAL ENGINEER SHALL NOT INCLUDE INSPECTION OF THE ABOVE ITEMS.

E. CONTRACTOR SHALL BE RESPONSIBLE FOR VERIFICATION OF ALL DIMENSIONS WITH ARCHITECTURAL DRAWINGS AND THE EXISTING BUILDING PRIOR TO START OF CONSTRUCTION. RESOLVE ANY DISCREPANCY WITH ARCHITECT.

F. CONSTRUCTION MATERIAL SHALL BE SPREAD OUT IF PLACED ON FRAMED FLOORS OR ROOF. LOAD SHALL NOT EXCEED THE DESIGN LIVE LOAD PER SQUARE FOOT.

G. WHERE REFERENCE IS MADE TO VARIOUS TEST STANDARDS FOR MATERIALS, SUCH STANDARDS SHALL BE THE LATEST EDITION AND/OR ADDENDUM.

H. ESTABLISH AND VERIFY ALL OPENINGS AND INSERTS FOR ARCHITECTURAL, MECHANICAL, ELECTRICAL AND PLUMBING WITH APPROPRIATE TRADES, DRAWINGS AND SUBCONTRACTORS PRIOR TO CONSTRUCTION.

I. NOTES AND DETAILS ON DRAWINGS SHALL TAKE PRECEDENCE OVER GENERAL STRUCTURAL NOTES AND TYPICAL DETAILS. WHERE NO SPECIFIC DETAILS ARE SHOWN, CONSTRUCTION SHALL CONFORM TO SIMILAR WORK ON THE PROJECT.

J. TYPICAL DETAILS ARE NOT CUT ON DRAWINGS, BUT APPLY UNLESS NOTED OTHERWISE.

K. WHERE ANY DISCREPANCIES OCCUR BETWEEN PLANS, DETAILS, GENERAL STRUCTURAL NOTES AND SPECIFICATIONS, THE GREATER REQUIREMENTS SHALL GOVERN. MODIFICATION OF CERTAIN CONNECTION DETAILS AS PART OF THE SHOP DRAWING REVIEW PROCESS SHALL BE ANTICIPATED BY THE CONTRACTOR.

L. THE CONTRACTOR SHALL VERIFY ALL FIELD DIMENSIONS PRIOR TO ORDERING MATERIALS AND STARTING CONSTRUCTION. THE ARCHITECT SHALL BE NOTIFIED OF ANY DISCREPANCIES OR INCONSISTENCIES.

M. CALCULATIONS FOR DESIGN/BUILD ITEMS MUST BE SUBMITTED FOR REVIEW OF ARCHITECT/STRUCTURAL ENGINEER AND SHALL BEAR THE SEAL OF A STRUCTURAL ENGINEER REGISTERED IN THE STATE OF HAWAII.

N. ALL CONSTRUCTION BRACING AND SHORING MUST BE DESIGNED BY THE CONTRACTOR.

O. STRUCTURAL ENGINNER IS NOT RESPONSIBLE FOR ANY OF THE GEOTECHNICAL REPORT.

# II. SOILS

A. COMPACTION TO 95% OF ASTM D-1557 U.N.O. COMPACTION INSPECTION SHALL BE PERFORMED BY A CERTIFIED THIRD PARTY CONTRACTED BY OWNER.

B. FILL MATERIAL:

1. ANY IMPORTED ENGINEERING FILLS SHALL HAVE THE FOLLOWING GRADATION BY WEIGHT:
   100% PASSING 6" SIEVE
   70-100% PASSING 3" SIEVE
   50-100% PASSING #4 SIEVE
   15% MAXIMUM PASSING #200 SIEVE
   LIQUID LIMIT 30 MAX.
   PLASTICITY INDEX 15 MAX.
   MAXIMUM SOLUBLE SULFATES = 0.1%
   MAXIMUM EXPANSION POTENTIAL OF 1.5%
2. SLAB BASE COURSE SHALL HAVE 100% PASSING 1-1/2" SIEVE, 45% TO 90% PASSING #4 SIEVE, NO MORE THAN 12% PASSING #200 SIEVE.
3. COMPACTION TO 95% OF ASTM D-1557 AS PER ABOVE.

# III. CONCRETE

A. ALL CONCRETE SHALLL BE READY MIXED CONFORMING TO ASTM C-94. IN ADDITION, ALL CONSTRUCTION SHALL COMPLY WITH APPLICABLE PROVISIONS OF THE FOLLOWING LATEST ACI STANDARDS:
1. ACI 318-BUILDING CODE REQUIREMENTS FOR STRUCTURAL CONCRETE.
2. ACI 301-SPECIFICATIONS FOR STRUCTURAL CONCRETE BUILDING.
3. ACI 306-PRACTICE FOR HOT WEATHER CONCRETING.
4. ACI 306-PRACTICE FOR COLD WEATHER CONCRETING.
5. ACI 211.1-PRACTICE FOR SELECTING PROPORTIONS FOR CONCRETE.
6. ACI 304-PRACTICE FOR MEASURING, MIXING AND PLACING.
7. ACI 315-PRACTICE FOR DETAILING CONCRETE.
8. 347-PRACTICE FOR FORMWORK.

B. CONCRETE MATERIALS SHALL CONFORM TO THE FOLLOWING STANDARDS:
1. PORTLAND CEMENT: ASTM C150, TYPE II (GRAY).
2. FLY ASH: ASTM C618, CLASS F.
3. NORMAL WEIGHT AGGREGATE: ASTM C33, COARSE AGGREGATE OR BETTER. AGGREGATE SHALL NOT BE SUSCEPTIBLE TO DELETERIOUS EXPANSION OF CONCRETE DUE TO ALKALI AGGREGATE REACTIVITY.
4. MAXIMUM COARSE AGGREGATE SIZE: 1-1/2 INCHES NOMINAL.
5. FINE AGGREGATE: FREE OF MATERIALS SUSCEPTIBLE TO ALKALI REACTIVITY.
6. WATER: ASTM C94 AND POTABLE.
7. MINIMUM COMPRESSIVE STRENGTH: 3000 PSI AT 28 DAYS (DESIGNED FOR 2500 PSI).

C. CONCRETE MIXTURES: FOOTINGS
1. MINIMUM COMPRESSIVE STRENGTH: 3000 PSI AT 28 DAYS.
2. MAXIMUM WATER-CEMENT RATIO: 0.50.
3. SLUMP LIMIT: 4 INCHES PLUS OR MINUS 1 INCH.
4. FLY ASH: 25 PERCENT.
5. AIR CONTENT: 4 PERCENT PLUS OR MINUS 1.5 PERCENT AT POINT OF DELIVERY FOR 3/4 INCH NOMINAL MAXIMUM AGGREGATE SIZE.

D. CONCRETE MIXTURES: SLABS ON GRADE
1. MINIMUM COMPRESSIVE STRENGTH: 3000 PSI AT 28 DAYS.
2. MAXIMUM WATER-CEMENT RATIO: 0.50.
3. SLUMP LIMIT: 4 INCHES PLUS OR MINUS 1 INCH.
4. FLY ASH: 25 PERCENT.
5. AIR CONTENT: DO NOT ALLOW AIR CONTENT OF TROWELLED FINISHED FLOORS TO EXCEED 3 PERCENT.

E. CONCRETE MIXTURES: TELESCOPE PIER & FOUNDATION
1. MINIMUM COMPRESSIVE STRENGTH: 4000 PSI AT 28 DAYS.
2. MAXIMUM WATER-CEMENT RATIO: 0.45.
3. SLUMP LIMIT: FOR CONCRETE WITH VERIFIED SLUMP OF 2 TO 4 INCHES BEFORE ADDING HIGH-RANGE WATER-REDUCING ADMIXTURE OR PLASTICIZING ADMIXTURE, PLUS OR MINUS 1 INCH.
4. FLY ASH: 25 PERCENT.
5. AIR CONTENT: 4 PERCENT PLUS OR MINUS 1.5 PERCENT AT POINT OF DELIVERY FOR 3/4 INCH NOMINAL MAXIMUM AGGREGATE SIZE.

F. CONCRETE PLACEMENT:
1. CONSOLIDATE PLACED CONCRETE WITH MECHANICAL VIBRATING EQUIPMENT ACCORDING TO ACI 301. DO NOT VIBRATE SELF-CONSOLIDATING CONCRETE.
2. CONCRETE SHALL NOT BE DROPPED MORE THAN FOUR FEET VERTICALLY WITHOUT THE USE OF A TREMIE.
3. UNLESS NOTED OTHERWISE, SLABS SHALL BE MACHINE TROWELED TO A SMOOTH HARD FINISH. WALKS, OPERATION AND MAINTENANCE AREAS SHALL BE BROOM FINISHED AFTER THE STEEL TROWEL FINISH. STORAGE AREAS SHALL BE LEFT SMOOTH.
4. CONCRETE SHALLL BE CURED ACCORDING TO ACI 308.1.

G. MINIMUM CONCRETE COVER OVER REINFORCING BARS SHALL BE AS FOLLOWS:
1. CONCRETE POURED DIRECTLY AGAINST EARTH..... 3"
2. FORMED CONCRETE EXPOSED TO WEATHER OR EARTH..... 2"
3. AGAINST LEVELED BASE COURSE..... 2"
4. FORMED WALLS NOT EXPOSED TO WEATHER OR EARTH..... 1-1/2"

H. CONCRETE FOOTINGS AND PADS MAY BE POURED AGAINST NEAT EXCAVATIONS.

I. CORNERS OF WALL EXPOSED TO VIEW SHALL BE PROVIDED WITH 3/4" BY 45° CHAMFERS UNLESS NOTED OTHERWISE ON THE DRAWINGS.

J. ALL REINFORCING BARS, ANCHOR BOLTS, AND CONCRETE INSERTS SHALL BE SECURED IN POSITION PRIOR TO PLACING CONCRETE.

K. SHEAR STUDS FOR EMBEDDED ITEMS SHALL BE WELDED IN ACCORDANCE WITH MANUFACTURERS RECOMMENDATIONS. STUDS SHALL BE CAPABLE OF BENDING 45° WITHOUT WELD FAILURE.

L. PROVIDE SLEEVES FOR PLUMBING AND ELECTRICAL OPENINGS IN CONCRETE BEFORE PLACING CONCRETE. VERIFY OPENINGS WITH ELECTRICAL AND MECHANICAL DRAWINGS. DO NOT CUT ANY REINFORCING WHICH MAY CONFLICT.

M. NO CONSTRUCTION JOINTS (OTHER THAN THOSE SHOWN ON DRAWINGS) SHALL BE INSTALLED WITHOUT APPROVAL OF THE ENGINEER.

N. CONTRACTOR SHALL NOTIFY THE STRUCTURAL ENGINEE 24 HRS IN ADVANCE TO OBSERVE COMPLETED FOOTING EXCAVATION AND ALL REINFORCING BAR PLACEMENTS BEFORE ANY CONCRETE IS PLACED.

O. REINFORCING STEEL:

1. ALL REINFORCING STEEL SHALL BE DEFORMED BARS CONFORMING TO ASTM A-615 GRADE 40 FOR #4 OR LESS, GRADE 60 FOR #5 OR GREATER. PROVIDE ASTM A-706 REINFORCING STEEL WHERE WELDING IS REQUIRED.
2. ALL REINFORCING IN CONCRETE SHALL BE CONTINUOUS OR LAPPED IN ACCORDANCE WITH ACI 318, AND NOT LESS THAN 36 DIAMETERS.
3. WELDED WIRE FABRIC SHALL HAVE A MINIMUM YIELD STRENGTH OF 65,000 PSI AND CONFORM TO ASTM A185.

P. SLABS ON GRADE:

1. 6" SLABS SHALL HAVE ONE LAYER OF #4 REBAR @ 16" O.C. EACH WAY AT CENTER OF SLAB, RECOMMENDED MAXIMUM CONTROL JOINT SPACING: 20' X 20' - SEE PLAN LOCATION.
2. PROVIDE PLASTIC VAPOR BARRIER (15 MIL MIN. THICKNESS) ASTM E1745, CLASS C. INCLUDE MANUFACTURER'S RECOMMENDED ADHESIVE OR PRESSURE-SENSITIVE TAPE.

Q. PREPARE DESIGN MIXTURES FOR EACH TYPE AND STRENGTH OF CONCRETE, PROPORTIONED ON THE BASIS OF LABORATORY TRIAL MIXTURE OR FIELD TEST DATA OR BOTH ACCORDING TO ACI 301. A QUALIFIED INDEPENDENT TESTING AGENCY SHALL PREPARE AND REPORT TRIAL MIXTURE TESTING RESULTS.

R. READY TO MIX CONCRETE: MEASURE, BATCH, MIX, AND DELIVER CONCRETE ACCORDING TO ASTM C94/C94M AND ASTM C1116, AND FURNISH BATCH TICKET INFORMATION.

S. CONSTRUCT FORMWORK SO CONCRETE MEMBERS AND STRUCTURES ARE OF SIZE, SHAPE, ALIGNMENT, ELEVATION, AND POSITION INDICATED, WITHIN TOLERANCE LIMITS OF ACI 117. LIMIT CONCRETE SURFACE IRREGULARITIES DESIGNATED BY ACI 347R AS ABRUPT OR GRADUAL, TO CLASS A, 1/8 INCH FOR SMOOTH-FORMED FINISHED SURFACES. FORMS SHALL BE CLEAN OF DEBRIS AND COATED WITH FORM RELEASE AGENT, BEFORE PLACING REINFORCEMENT.

T. SUBMITTALS: THE FOLLOWING SHALL BE SUBMITTED FOR ARCHITECT'S AND ENGINEER'S REVIEW PRIOR TO CONSTRUCTION:

1. PRODUCT DATA FOR EACH TYPE OF PRODUCT INSTALLED.
2. DESIGN MIXTURES, INDICATING AMOUNTS OF MIXING WATER TO BE WITHHELD FOR LATER ADDITION AT PROJECT SITE.
3. STEEL REINFORCEMENT SHOP DRAWINGS THAT DETAIL FABRICATION, BENDING AND PLACEMENT. INCLUDE BAR SIZES, LENGTHS, MATERIAL GRADE, BAR SCHEDULES, STIRRUP SPACING, BENT BAR DIAGRAMS, BAR ARRANGEMENTS AND SPACING, SPLICES AND LAPS, AND SUPPORTS FOR CONCRETE REINFORCEMENT.

# IV. STRUCTURAL STEEL

A. STRUCTURAL STEEL SHALL BE FABRICATED AND ERECTED IN ACCORDANCE WITH SPECIFICATIONS OF AISC MANUAL, LATEST EDITION. ALL INTERIOR AND EXTERIOR STEEL TO RECEIVE SHOP PRIME COAT AND SHOP FINISH COAT. FINISH COAT TO BE TOUCHED UP IN FIELD.

1. W SHAPES: ASTM A992
2. STRUCTURAL SHAPES AND PLATES: ASTM A-36
3. TUBULAR STEEL: ASTM A-500, GRADE B (46 KSI)
4. STEEL PIPE: ASTM A501 OR ASTM A53, TYPES E OR S (35 KSI)
5. BAR GRATING 1-1/4" X 3/16" @ 1-3/16" O.C. GALVANIZED STEEL. ALL CUT EDGES OF GRATING TO BE BANDED.
6. HANDRAIL 1-1/4" STANDARD PIPE WITH MITERED OR ROUNDED TURNS U.N.O.
7. CONNECTIONS FOR STAIRWAYS AND LADDERS: ASTM A-307, GRADE A
8. CONNECTIONS FOR MAIN STEEL INCLUDING BRACING: ASTM A-325-SC
9. BEAM CONNECTION DOUBLE SHEAR MAXIMUM ROW OF 3/4" DIAMETER BOLTS, AISC TABLE 10-1, IN CONJUNCTION WITH TABLE 10-2, WELD A, WHERE INDICATED.
10. WELDING SHALLL CONFORM TO AWS SPECIFICATION. ELECTRODES: E70XX
11. PRIME COAT - PER ARCHITECTURAL SPECIFICATIONS.
12. FINISH COAT - PER ARCHITECTURAL SPECIFICATIONS.
13. ALL CONNECTIONS FOR EXPOSED STRUCTURES SHALL BE "HIDDEN" TO INSIDE. CLOSURE PLATES ARE TO BE PROVIDED TO TRIM STEEL SUCH AS AT EXPOSED ENDS OF CHANNELS. ALL EXPOSED WELDS TO BE GROUND SMOOTH.
14. CHECKERED PLATE SHALL BE 1/4" REGULAR QUALITY CARBON STEEL (ALLOWABLE BENDING STRESS 17,000 PSI) GALVANIZED FINISH ASTM GP90. PLUG WELD TO SUPPORTING BEAMS @ 4'-0" O.C. U.N.O.

B. REFER TO ARCHITECTURAL DRAWINGS FOR MISCELLANEOUS STEEL NOT SHOWN ON THE STRUCTURAL DRAWINGS.

C. SUBMITTALS:
1. SHOP DRAWINGS SHOWING FABRICATION OF STRUCTURAL STEEL COMPONENTS, INCLUDING:
   - DETAIL CUTS, CONNECTIONS, SPLICES, CAMBER, HOLES, AND OTHER PERTINENT DATA
   - EMBEDMENT DRAWINGS
   - INDICATION OF WELDS BY AWS STANDARD SYMBOLS, DISTINGUISHING BETWEEN SHOP AND FIELD WELDS, AND SHOW SIZE, LENGTH AND TYPE OF EACH WELD.
   - INDICATION OF TYPE, SIZE, AND LENGTH OF BOLTS DISTINGUISHING BETWEEN SHOP AND FIELD BOLTS. IDENTITY PRETENSIONED AND SLIP CRITICAL HIGH STRENGTH BOLTED CONNECTIONS.
2. WELDING CERTIFICATES.

D. GALVANIZING REPAIRS: PREPARE AND REPAIR DAMAGED GALVANIZED COATINGS ON FABRICATED AND INSTALLED STEEL WITH GALVANIZED REPAIR PAINT ACCORDING TO ASTM A780 AND MANUFACTURER'S INSTRUCTIONS.

# V. ROUGH CARPENTRY:

A. ALL FRAMING PER IBC CHAPTER 23. FRAMING LUMBER SHALL COMPLY WITH THE 2005 EDITION OF THE NATIONAL DESIGN SPECIFICATION. MAXIMUM MOISTURE CONTENT SHALL NOT EXCEED 19%. ALL SAWN LUMBER SHALL BE STAMPED WITH THE GRADE MARK OF AN APPROVED LUMBER GRADING AGENCY. ALL SWAN LUMBER SHALL BE DOUBLAS FIR-LARCH WITH THE FOLLOWING MINIMUM PROPERTIES:

WOOD TYPE

BEAMS, LEDGERS, AND TOP PLATES
WIDTH 4" OR LESS ---------- D.F. #2
WIDTH GREATER THAN 4" ---------- D.F. #1

POSTS
4 X 4 ---------- D.F. #1

B. DO NOT NOTCH, DRILL, OR SPLICE BEAMS OR LOAD BEARING STUDS WITHOUT PRIOR APPROVAL OF THE STRUCTURAL ENGINEER THRU THE ARCHITECT.

C. ALL NAILING NOT NOTED SHALL BE ACCORDING TO TABLE 2304.9.1 OF THE INTERNATIONAL BUILDING CODE. ALL NAILS SHALL BE WITH COMMON NAILS. WOOD CONNECTORS SHALL BE AS MANUFACTURED BY SIMPSON STRONG-TIE COMPANY, INC. OR OTHER MANUFACTURER WITH CURRENT AND EQUIVALENT I.C.B.O. APPROVAL. ALL NAIL HOLES IN CONNECTORS SHALL BE FILLED WITH NAIL OF THE LARGEST SIZE INDICATED IN THE MANUFACTURER'S CATALOG U.N.O.

D. ALL FABRICATION SHALL BE PERFORMED ON THE PREMISES OF A FABRICATOR REGISTERED AND APPROVED TO PERFORM SUCH WORK WITHOUT SPECIAL INSPECTION.

# VI. EPOXY BOLTS OR DOWELS AND EXPANSION BOLTS:

A. EPOXY BOLTS OR DOWELS SHALL BE A THREADED ROD OR REINFORCING STEEL INSTALLED WITH THE "SET" ADHESIVE BY SIMPSON PER ICBO REPORT ESR-1772.

B. EXPANSION BOLTS FOR CONCRETE SHALL BE A "KWIK BOLT III" BY HILTI INSTALLED PER ICBO REPORT ESR-1335. EXPANSION BOLTS SHALL NOT BE USED IN MASONRY.

C. THE CONTRACTOR MAY NOT USE SUBSTITUTES FOR EPOXY OR EXPANSION ANCHORS WITHOUT PRIOR APPROVAL OF THE STRUCTURAL ENGINEER.

D. FOR MINIMUM EMBEDMENT LENGTH SEE DETAILS. INSTALL ALL BOLTS AS OUTLINED IN MANUFACURER'S SPECIFICATIONS, UTILIZING PROPER SIZE AND TYPE OF DRILL, CLEANING HOLE, DRIVING AND TIGHTENING BOLT.

E. SPECIAL INSPECTION OF ALL EPOXY AND EXPANSION ANCHORS IS REQUIRED.

**THIS DRAWING IS FOR REFERENCE ONLY, THERE ARE NO PHASE 4 TASKS DESCRIBED HERE**

HARRY LEWSLEY
LICENSED PROFESSIONAL ENGINEER
No. 13615-S
HAWAII U.S.A.

THIS WORK WAS PREPARED BY ME OR UNDER MY SUPERVISION AND CONSTRUCTION OF THIS PROJECT WILL BE UNDER MY OBSERVATION.

Harry Lewsley 1/24/2012
SIGNATURE

4/30/2012
EXPIRATION DATE OF LICENSE

# Pan-STARRS PS2 Lure Modifications
# University of Hawaii (PHASE 4)

HAWAII

MAUI, HALEAKALA,


2051 W. SUNSET RD.
SUITE NO. 101
TUCSON, ARIZONA 85704
TEL. (520) 293-1488
FAX (520) 293-8340
WWW.M3ENG.COM

ARCHITECTURE ENGINEERING CONSTRUCTION MANAGEMENT


## Revisions

| | Description | Date |
|---|---|---|
| 1 | SOILS INFORMATION | 1/24/12 |
| 2 | | |
| 3 | | |
| 4 | | |
| 5 | | |
| 6 | | |

Drawn: J.T.A.
Checked: H.J.L.
Issue Date: 04-04-11

Drawing Title

GENERAL STRUCTURAL NOTES

Sheet Number

SB001

M3PN 100064

Last Update: 4.4.2011


File: P:\2010\100064\Structural\SB001.dwg LAST UPDATE: DEC 21, 2010 @ 10:26 AM BY: jo1682 LAST REV: PLOT SCALE: 1:1

## VII. SHOP DRAWINGS:

A. SHOP DRAWINGS SHALL BE SUBMITTED FOR ALL STRUCTURAL ITEMS IN ADDITION TO ITEMS REQUIRED BY ARCHITECTURAL SPECIFICATIONS. CONSTRUCTION DOCUMENTS SHALL NOT BE REPRODUCED FOR USE AS SHOP DRAWINGS.

B. THE CONTRACTOR SHALL REVIEW ALL SHOP DRAWINGS PRIOR TO SUBMITTAL. ITEMS NOT IN ACCORDANCE WITH CONTRACT DOCUMENTS SHALL BE FLAGGED UPON HIS REVIEW. VERIFY ALL DIMENSIONS WITH ON-SITE CONDITIONS & EXISTING BUILDING.

C. ANY CHANGE, SUBSTITUTIONS, OR DEVIATIONS FROM CONTRACT DOCUMENTS SHALL BE CLOUDED BY MANUFACTURER OR FABRICATOR. ANY OF THE AFOREMENTIONED WHICH ARE NOT CLOUDED OR FLAGGED BY SUBMITTING PARTIES, SHALL NOT BE CONSIDERED ALLOWED AFTER ENGINEER'S REVIEW, UNLESS NOTED ACCORDINGLY BY THE ENGINEER OF RECORD.

D. THE ENGINEER HAS THE RIGHT TO APPROVE OR DISAPPROVE ANY CHANGES TO CONTRACT DOCUMENTS AT ANY TIME BEFORE OR AFTER SHOP DRAWING REVIEW.

E. THE SHOP DRAWINGS DO NOT REPLACE THE CONTRACT DOCUMENTS. ITEMS OMITTED OR SHOWN INCORRECTLY AND ARE NOT FLAGGED BY THE STRUCTURAL ENGINEER OR ARCHITECT ARE NOT TO BE CONSIDERED CHANGES TO CONTRACT DOCUMENTS. IT IS THE CONTRACTOR'S RESPONSIBILITY TO MAKE SURE ITEMS ARE CONSTRUCTED TO CONTRACT DOCUMENTS.

F. THE ADEQUACY OF ENGINEERING DESIGNS AND LAYOUT PERFORMED BY OTHERS RESTS WITH THE DESIGNING OR SUBMITTING AUTHORITY.

G. REVIEWING IS INTENDED ONLY AS AN AID TO THE CONTRACTOR IN OBTAINING CORRECT SHOP DRAWINGS. RESPONSIBILITY FOR CORRECTNESS AND COMPLETENESS SHALL REST WITH THE CONTRACTOR.

H. SHOP DRAWINGS WILL BE RETURNED FOR RESUBMITTAL IF MAJOR ERRORS ARE FOUND DURING REVIEW.

I. ALLOW FIVE WORKING DAYS FOR REVIEW OF SHOP DRAWINGS BY THE STRUCTURAL ENGINEER. ALL SUBMITTALS WITH A REQUESTED REVIEW TIME LESS THAN FIVE WORKING DAYS MAY BE RETURNED WITHOUT REVIEW AT THE ENGINEER'S DISCRETION.

## ABBREVIATIONS (NOT ALL ABREVIATIONS SHOWN BELOW ARE USED IN THIS SET OF DRAWINGS)

| | |
|---|---|
| & | AND |
| @ | AT |
| A.B. | ANCHOR BOLT |
| AC | ASPHALT CONCRETE |
| ABC | AGGREGATE BASE COURSE |
| ACI | AMERICAN CONCRETE INSTITUTE |
| AFGE | ABOVE FINISHED GRADE ELEVATION |
| L | ANGLE |
| AFF | ABOVE FINISHED FLOOR |
| AFGE | ABOVE FINISHED GRADE ELEVATION |
| AF&PA | AMERICAN FOREST & PAPER ASSOCIATION |
| AISC | AMERICAN INSTITUTE OF STEEL CONSTRUCTION |
| AISI | AMERICAN IRON AND STEEL INSTITUTE |
| ALT | ALTERNATE |
| ALUM | ALUMINUM |
| ANSI | AMERICAN NATIONAL STANDARDS |
| APPROX | APPROXIMATELY |
| ARCH | ARCHITECTURAL |
| ARCH'L | ARCHITECTURAL |
| ASCE | AMERICAN SOCIETY OF CIVIL ENGINEERS |
| ASD | ALLOWABLE STRESS DESIGN |
| ASME | AMERICAN SOCIETY OF MECHANICAL ENGINEERS |
| ASPH | ASPHALT |
| ASTM | AMERICAN SOCIETY FOR TESTING & MATERIALS |
| AWC | AMERICAN WOOD COUNCIL |
| AVG | AVERAGE |
| BLDG | BUILDING |
| BFFE | BELOW FINISHED FLOOR ELEVATION |
| BFGE | BELOW FINISHED GRADE ELEVATION |
| BLK(G) | BLOCKING |
| BM | BEAM |
| B.O. | BOTTOM OF |
| BOF | BOTTOM OF FOOTING |
| BOT | BOTTOM |
| BRBF | BUCKLING RESTRAINED BRACED FRAME |
| BRG | BEARING |
| C | CHANNEL |
| CBC | CALIFORNIA BUILDING CODE |
| C/C | CENTER TO CENTER |
| CF | CUBIC FOOT |
| CIP | CAST IN PLACE |
| CJ | CONTROL JOINT |
| CJP | CONTROL JOINT PENETRATION |
| CL | CENTER LINE |
| CLR | CLEAR(ANCE) |
| COL | COLUMN |
| CONC | CONCRETE |
| CONN | CONNECTION |
| CONST | CONSTRUCTION |
| CTR | CENTER |
| CY | CUBIC YARD(S) |
| ° | DEGREE(S) |
| ø | DIAMETER |
| d | PENNY NAIL SIZE |
| DBA | DEFORMED BAR ANCHOR |
| DBL | DOUBLE |
| DEG | DEGREE(S) |
| DEL | DELETE |
| DET | DETAIL |
| DET'L | DETAIL(S) |
| DEMO | DEMOLISH |
| LL | DOUBLE ANGLE |
| DT | DOUBLE TEE |
| DIAG | DIAGONAL |
| DIA | DIAMETER |
| DIM | DIMENSION(S) |
| DL | DEAD LOAD |
| DN | DOWN |
| DO | DITTO |
| DR | DOOR |
| DWG(S) | DRAWINGS |
| E | EASTING |
| E, (E) | EXISTING |
| EA | EACH |
| EBF | ECCENTRICALLY BRACED FRAME |
| EF, E/F | EACH FACE |
| EL | ELEVATION |
| ELEC | ELECTRICAL |
| ELEV | ELEVATION |
| EMBED | EMBEDDED, EMBEDMENT |
| EW, E/W | EACH WAY |
| EXIST | EXISTING |
| EXP | EXPANSION |
| EXT | EXTERIOR |
| FDN | FOUNDATION |
| FF | FINISHED FLOOR |
| FFE | FINISHED FLOOR ELEVATION |
| FG | FINISHED GRADE |
| FGE | FINISHED GRADE ELEVATION |
| FIN | FINSH(ED) |
| FLR | FLOOR |
| FS | FAR SIDE |
| FT | FOOT, FEET |
| FTG | FOOTING |
| GALV | GALVANIZED |
| GL | GRID LINE |
| GLB | GLULAM BEAM |
| GSN | GENERAL STRUCTURAL NOTES |
| GWB | GYPSUM WALL BOARD |
| GYP | GYPSUM |
| H | H SHAPE |
| HAS | HEADED ANCHOR STUD |
| HGT | HEIGHT |
| HORIZ | HORIZONTAL |
| HSA | HEADED STUD ANCHOR |
| HSS | HOLLOW STRUCTURAL SECTION |
| HVAC | HEATING/VENTILATING/AIR CONDITIONING |
| IBC | INTERNATIONAL BUILDING CODE |
| ID | INSIDE DIAMETER |
| ILO | IN LIEU OF |
| INFO | INFORMATION |
| INT | INTERIOR |
| JCT | JUNCTION |
| JT | JOINT |
| K, KIPS | KILO POUNDS |
| KLF | KILO POUNDS PER LINEAR FOOT |
| KSF | KILO POUNDS PER SQUARE FOOT |
| L | LENGTH |
| LAST | LOWEST ANTICIPATED SERVICE TEMPERATURE |
| LAM | LAMINATE(D) |
| LB(S) | POUND(S) |
| LF | LINEAL FOOT/FEET |
| LFRS | LATERAL FORCE RESISTING SYSTEM |
| LLBB | LONG LEG BACK TO BACK |
| LLH | LONG LEG HORIZONTAL |
| LLV | LONG LEG VERTICAL |
| LOC | LOCATION(S) |
| LRFD | LOAD RESISTANCE FACTOR DESIGN |
| LT | LIGHT |
| LW | LIGHT WEIGHT |
| M | M SHAPE |
| MACH | MACHINE |
| MAINT | MAINTENANCE |
| MAS | MASONRY |
| MAT'L | MATERIAL(S) |
| MAX | MAXIMUM |
| MB | MACHINE BOLTS |
| MC | MISCELLANEOUS CHANNEL |
| MCJ | MASONRY CONTROL JOINT |
| MDF | MEDIUM DENSITY FIBERBOARD |
| MECH | MECHANICAL |
| MED | MEDIUM |
| MF | MOMENT FRAME |
| MFR | MANUFACTUER |
| MT | STRUCTURAL TEE |
| # | NUMBER |
| N, (N) | NEW |
| N | THREADS INCLUDED |
| N | NORTHING |
| NA, N/A | NOT APPLICABLE |
| NIC | NOT IN CONTRACT |
| NOM | NOMINAL |
| NS | NEAR SIDE |
| NTS | NOT TO SCALE |
| O/ | OVER |
| OC, O/C | ON CENTER |
| OCBF | ORDINARY CONCENTRICALLY BRACED FRAME |
| OD | OUTSIDE DIAMETER |
| OH | OPPOSITE HAND |
| OMF | ORDINARY MOMENT FRAME |
| OPP | OPPOSITE |
| OS, O/S | OVERSIZED |
| % | PERCENT(AGE) |
| P | PIPE |
| P/C | PRECAST CONCRETE |
| PCI | PRECAST CONCRETE INSTITUTE |
| PJP | PARTIAL JOINT PENETRATION |
| PL | PLATE |
| PLB | PLUMBING |
| PLF | POUNDS PER LINEAR FOOT |
| PNL | PANEL(S) |
| PLYWD | PLYWOOD |
| PSF | POUNDS PER SQUARE FOOT |
| RAD | RADIUS |
| REINF | REINFORCEMENT |
| REQ'D | REQUIRED |
| REQ'MENT | REQUIREMENT(S) |
| REF | REFER(ENCE) |
| REV | REVISION |
| S | S SHAPE |
| SC | SLIP CRITICAL |
| SCBF | SPECIAL CONCENTRICALLY BRACED FRAME |
| SCM | STEEL CONSTRUCTION MANUAL |
| SDM | SEISMIC DESIGN MANUAL |
| SCH | SCHEDULE |
| SCHED | SCHEDULE |
| SECT | SECTION |
| SF | SQUARE FOOT |
| SHT | SHEET |
| SIM | SIMILAR |
| SLBB | SHORT LEG BACK TO BACK |
| SLH | SHORT LEG HORIZONTAL |
| SLV | SHORT LEG VERTICAL |
| SMF | SPECIAL MOMENT FRAME |
| STRUC | STRUCTURAL |
| ST | STRUCTURAL TEE |
| SW | SHEAR WALL |
| T&B | TOP AND BOTTOM |
| TO | TOP OF |
| TOB | TOP OF BEAM |
| TOC | TOP OF CONCRETE |
| TOF | TOP OF FOOTING |
| TOM | TOP OF MASONRY |
| TOP | TOP OF PARAPET |
| TOS | TOP OF STEEL |
| TOW | TOP OF WALL |
| TS | TUBE STEEL |
| TW | TOP OF WALL |
| TYP | TYPICAL |
| UBC | UNIFORM BUILDING CODE |
| ULT | ULTIMATE |
| UNO | UNLESS NOTED OTHERWISE |
| UON | UNLESS OTHERWISE NOTED |
| UTIL | UTILITIES |
| VAR | VARIES |
| VER | VERIFY |
| VERT | VERTICAL |
| VOL | VOLUME |
| W, WF | WIDE FLANGE |
| W/ | WITH |
| WDT | WIDTH |
| WGT | WEIGHT |
| W/O | WITHOUT |
| WT | STRUCTURAL TEE |
| WWF | WELDED WIRE FABRIC |
| WSD | WORKING STRESS DESIGN |
| X | THREADS EXCLUDED |
| YD | YARD(S) |

## LEGEND

| SYMBOL | DESCRIPTION |
|---|---|
| STEEL BEAM / MOMENT CONNECTION | DENOTES MOMENT CONNECTION AND PLAN LOCATION(S) |
| BRACED FRAME, BF-3, BRACED FRAME LOCATION, FRAME NUMBER | BRACED FRAME NUMBER AND PLAN LOCATION(S) |
| MOMENT FRAME, MF-3, MOMENT FRAME LOCATION, FRAME NUMBER | MOMENT FRAME INDICATION AND PLAN LOCATION(S) |
| SPAN DIRECTION | CONCRETE OVER METAL DECK |
| SPAN DIRECTION | METAL DECK |
| SPAN DIRECTION | STEEL GRATING |
| | STEEL CHECKERED PLATE |
| | SMOOTH STEEL PLATE |

**THIS DRAWING IS FOR REFERENCE ONLY, THERE ARE NO PHASE 4 TASKS DESCRIBED HERE**

HARRY LEWSLEY — LICENSED PROFESSIONAL ENGINEER No. 13615-S — HAWAII U.S.A.

THIS WORK WAS PREPARED BY ME OR UNDER MY SUPERVISION AND CONSTRUCTION OF THIS PROJECT WILL BE UNDER MY OBSERVATION.

SIGNATURE: Harry Lewsley 4/4/2011

EXPIRATION DATE OF LICENSE: 4/30/2012

# Pan-STARRS PS2 Lure Modifications
## University of Hawaii (PHASE 4)

MAUI, HALEAKALA, HAWAII


2051 W. SUNSET RD.
SUITE NO. 101
TUCSON, ARIZONA 85704
TEL. (520) 293-1488
FAX (520) 293-8349
WWW.M3ENG.COM

ARCHITECTURE
ENGINEERING
CONSTRUCTION MANAGEMENT


### Revisions

| Description | Date |
|---|---|
| 1 | |
| 2 | |
| 3 | |
| 4 | |
| 5 | |
| 6 | |

Drawn: J.T.A.
Checked: H.J.L.
Issue Date: 04-04-11

Drawing Title: GENERAL STRUCTURAL NOTES (CONT.)

Sheet Number: SB002

M3PN 100064

Last Update: 3.7.2011

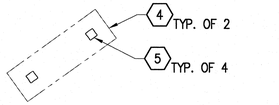


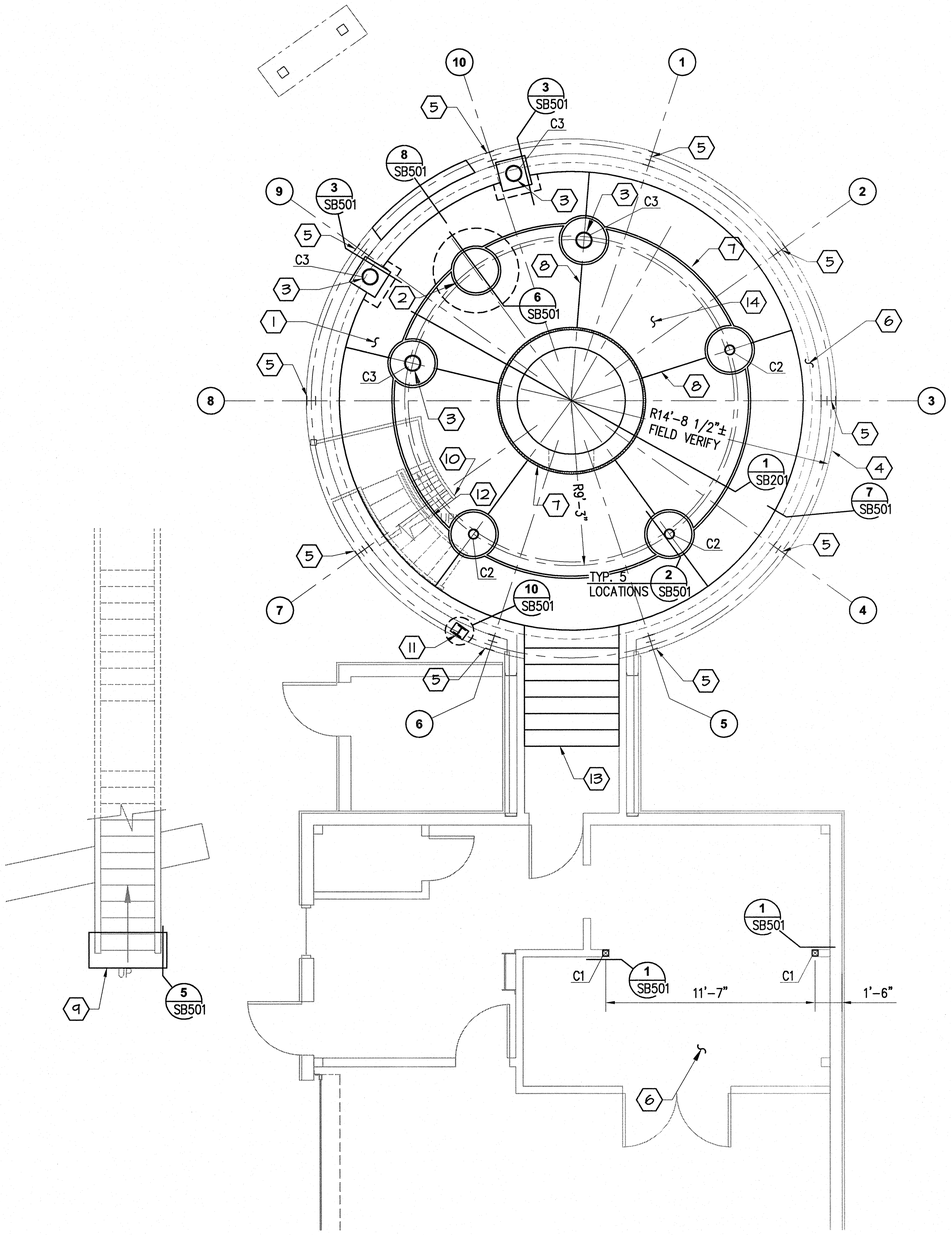


## FOUNDATION PLAN
SCALE: 1/4" = 1'-0"

NORTH

| COLUMN SCHEDULE | | | |
|---|---|---|---|
| MARK | SIZE | MATERIAL | BASE CONNECTION |
| C1 | 4 X 4 DF#1 | WOOD | SEE DETAIL 1/SB501 |
| C2 | 6" STD PIPE | STEEL | SEE DETAIL 2/SB501 |
| C3 | 10" XS PIPE | STEEL | SEE DETAILS 2/SB501 (SIM) & 3/SB501 |

SEE DRAWING SB401 FOR PIER PLAN & COLUMN DIMENSIONS.

NOTE: UNDER SLAB STYROFOAM IS REQUIRED ONLY ABOVE THE TELESCOPE PIER FOOTING. VAPOR BARRIER ID REQUIRED UNDER ALL NEW CONCRETE SLABS.

**THIS DRAWING IS FOR REFERENCE ONLY. IT DESCRIBES NO PHASE 4 TASKS.**

## STRUCTURAL FOUNDATION PLAN KEY NOTES

1. 6" CONCRETE SLAB ON GRADE W/ #4 @ 16" O.C. EACH WAY CENTERED IN SLAB OVER VAPOR BARRIER OVER 4" ABC.
2. HYDRAULIC LIFT CASING.
3. HYDRAULIC LIFT GUIDE COLUMN.
4. EXISTING CONCRETE FOUNDATION TO REMAIN.
5. EXISTING STEEL COLUMN TO REMAIN.
6. EXISTING SLAB TO REMAIN. SEE AR101 FOR EXTENTS.
7. PROVIDE 3" STYROFOAM SEPARATION BETWEEN PIER FOUNDATION & ADJOINING SLAB & FOOTINGS. TYPICAL ON ALL BELOW GRADE PIER VERTICAL SURFACES.
8. CONTROL JOINT PER TYPICAL DETAIL 2/SJ501.
9. 2'-0" WIDE X 1'-6" DEEP X 4'-4" LONG CONCRETE FOOTING W/ (3) #5 LONGITUDINAL & #5 @ 12" O.C. TRANSVERSE @ BOTTOM.
10. PROVIDE 2" GAP BETWEEN BOTTOM OF INBOARD STAIR STRINGER & CONCRETE SLAB. DO NOT ATTACH STRINGER TO SLAB.
11. PROVIDE W6x20 WIND COLUMN. ATTACH TO CONCRETE STEM WALL PER SF201.
12. ATTACH STAIR OUTBOARD STRINGER TO CONCRETE SLAB PER 5/SB501, SIM.
13. NEW CONCRETE STEPS PER 4/SB501.
14. 6" CONCRETE SLAB ON GRADE W/ #4 @ 16" O.C. E.W. CENTERED IN SLAB OVER VAPOR BARRIER OVER 3" STYROFOAM® HIGHLOAD 60 OVER 4" A.B.C.

HARRY LEWSLEY
LICENSED PROFESSIONAL ENGINEER
No. 13615-S
HAWAII U.S.A.

THIS WORK WAS PREPARED BY ME OR UNDER MY SUPERVISION AND CONSTRUCTION OF THIS PROJECT WILL BE UNDER MY OBSERVATION.

Harry Lewsley 4/4/2011
SIGNATURE

4/30/2012
EXPIRATION DATE OF LICENSE

# Pan-STARRS PS2 Lure Modifications
# University of Hawaii
## (PHASE 4)

MAUI, HALEAKALA, HAWAII


2051 W. SUNSET RD.
SUITE NO. 101
TUCSON, ARIZONA 85704
TEL. (520) 293-1486
FAX (520) 293-1488
WWW.LKSENG.COM

ARCHITECTURE
ENGINEERING
CONSTRUCTION MANAGEMENT


**Revisions**

| Description | Date |
|---|---|
| 1 | |
| 2 | |
| 3 | |
| 4 | |
| 5 | |
| 6 | |

Drawn: J.T.A.
Checked: H.J.L.
Issue Date: 04-04-11

Drawing Title
STRUCTURAL FOUNDATION PLAN

Sheet Number
SB101

M3PN 100064

Last Update: 3.8.2011


File: P:\2010\100064\Structural\SB101.dwg LAST UPDATE: NOV 24, 2010 @ 10:48 AM BY: ja1682 LAST REV: PLOT SCALE: 1:1

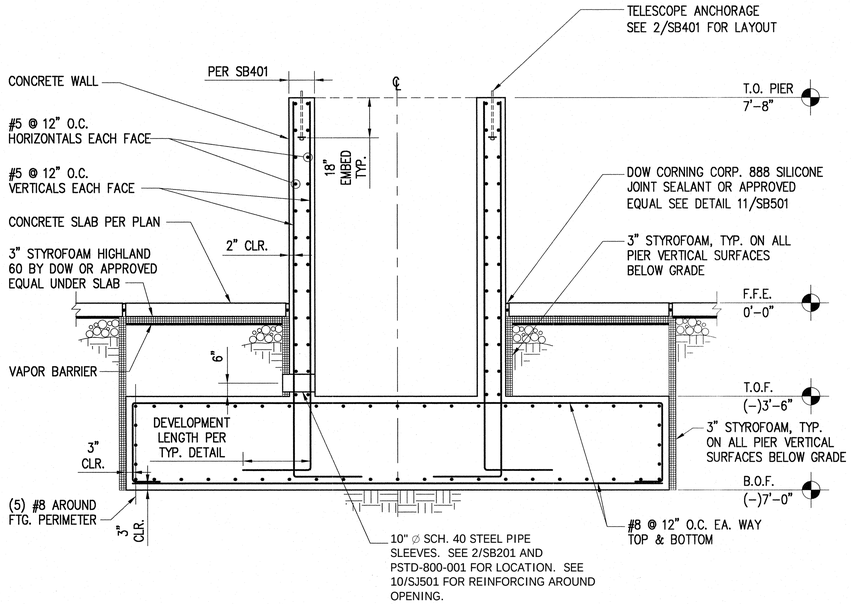


## TELESCOPE PIER SECTION

SCALE: 3/8" = 1'-0"

1

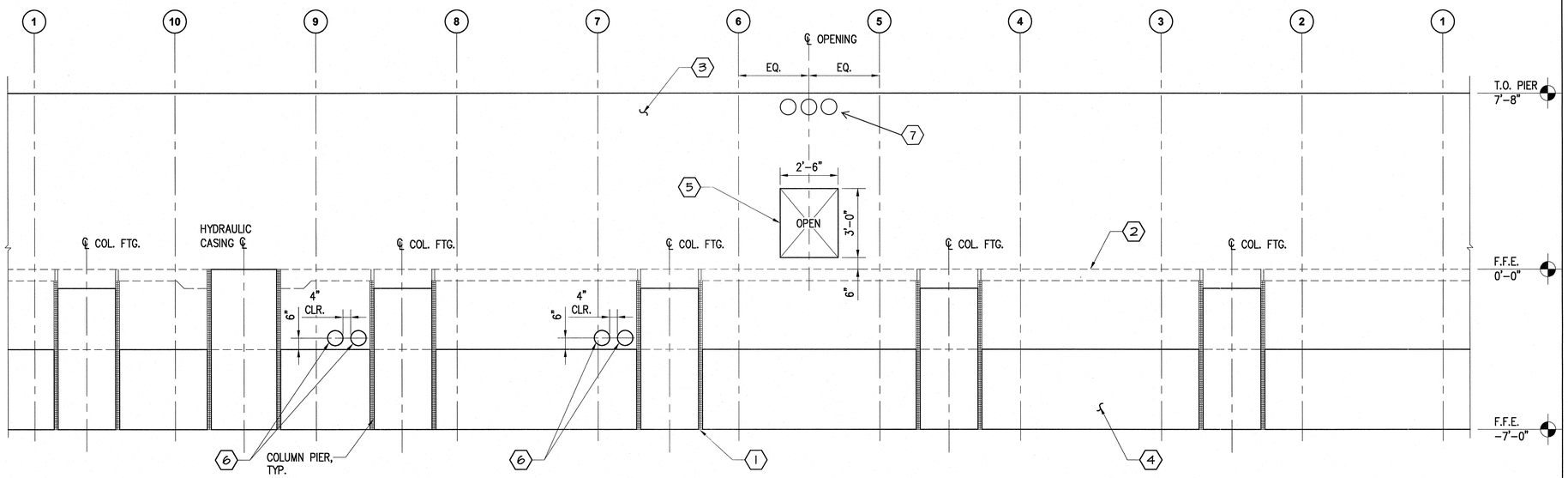


## TELESCOPE PIER DEVELOPED ELEVATION

SCALE: 3/8" = 1'-0"

2

**THIS DRAWING IS FOR REFERENCE ONLY. IT DESCRIBES NO PHASE 4 TASKS**

## STRUCTURAL FOUNDATION PLAN KEY NOTES

1. PROVIDE 3" STYROFOAM SEPARATION BETWEEN PIER FOUNDATION & ADJOINING SLAB & FOOTINGS.
2. CONCRETE SLAB PER SB101.
3. CONCRETE WALL. SEE 1/SB201 FOR REINFORCING.
4. TELESCOPE PIER FOUNDATION. SEE 1/SB201 FOR REINFORCING.
5. WALL OPENING. REINFORCE PER TYPICAL DETAIL 10/SJ501.
6. 10"ø SCH. 40 STEEL PIPE SLEEVE. SEE 10/SJ501 FOR REINFORCING AROUND OPENING. DO NOT ACCOMMODATE MORE THAN ONE SLEEVE BETWEEN VERTICAL BARS.
7. 8"ø SCH. 40 PVC PIPE FOR EXIT CONDUITS. SEE 10/SJ501 FOR REINFORCING AROUND OPENING. DO NOT ACCOMMODATE MORE THAN ONE PIPE BETWEEN VERTICAL BARS. SEE PSTD-800-001 FOR DETAILS ON PLACEMENT OF EXIT CONDUITS AND CONCRETE INSERTS FOR CABLE TRAY SUPPORT.

HARRY LEWSLEY
LICENSED PROFESSIONAL ENGINEER
No. 13615-S
HAWAII U.S.A.

THIS WORK WAS PREPARED BY ME OR UNDER MY SUPERVISION AND CONSTRUCTION OF THIS PROJECT WILL BE UNDER MY OBSERVATION.

Harry Lewsley 4/4/2011
SIGNATURE

4/30/2012
EXPIRATION DATE OF LICENSE

# Pan-STARRS PS2 Lure Modifications
# University of Hawaii (PHASE 4)

MAUI, HALEAKALA, HAWAII


2051 W. SUNSET RD.
SUITE NO. 101
TUCSON, ARIZONA 85704
TEL. (520) 293-1488
FAX. (520) 293-4348
WWW.MSENG.COM

ARCHITECTURE
ENGINEERING
CONSTRUCTION MANAGEMENT


**Revisions**

| Description | Date |
|---|---|
| 1 | |
| 2 | |
| 3 | |
| 4 | |
| 5 | |
| 6 | |

Drawn: J.T.A.
Checked: H.J.L.
Issue Date: 04-04-11

Drawing Title

**TELESCOPE PIER SECTION + ELEVATION**

Sheet Number

**SB201**

M3PN 100064

Last Update: 3.14.2011

NOTE:
OWNER SHALL PROVIDE ANCHOR BOLT TEMPLATE & ANCHOR BOLTS LOCATION SHALL BE INSPECED AND APPROVED BY OWNER PRIOR AND AFTER CONCRETE PLACEMENT. ANY CHANGES IN SIZE OF BOLT, QUANITTY, SPACING OR EMBEDMENT SHALL BE COORDINATED WITH OWNER AND ARCHITECT/STRUCTURAL ENGINEER. SEE PSTD-800-001 FOR DETAILS ON CABLE WRAP ATTACHMENTS AND PIER PENETRATIONS.

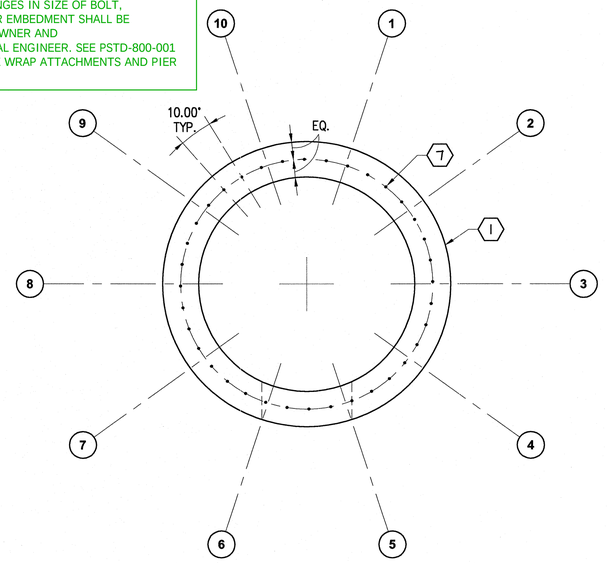


2 TOP OF TELESCOPE PIER/ANCHOR LAYOUT PLAN
SCALE: 1/2" = 1'-0"
NORTH

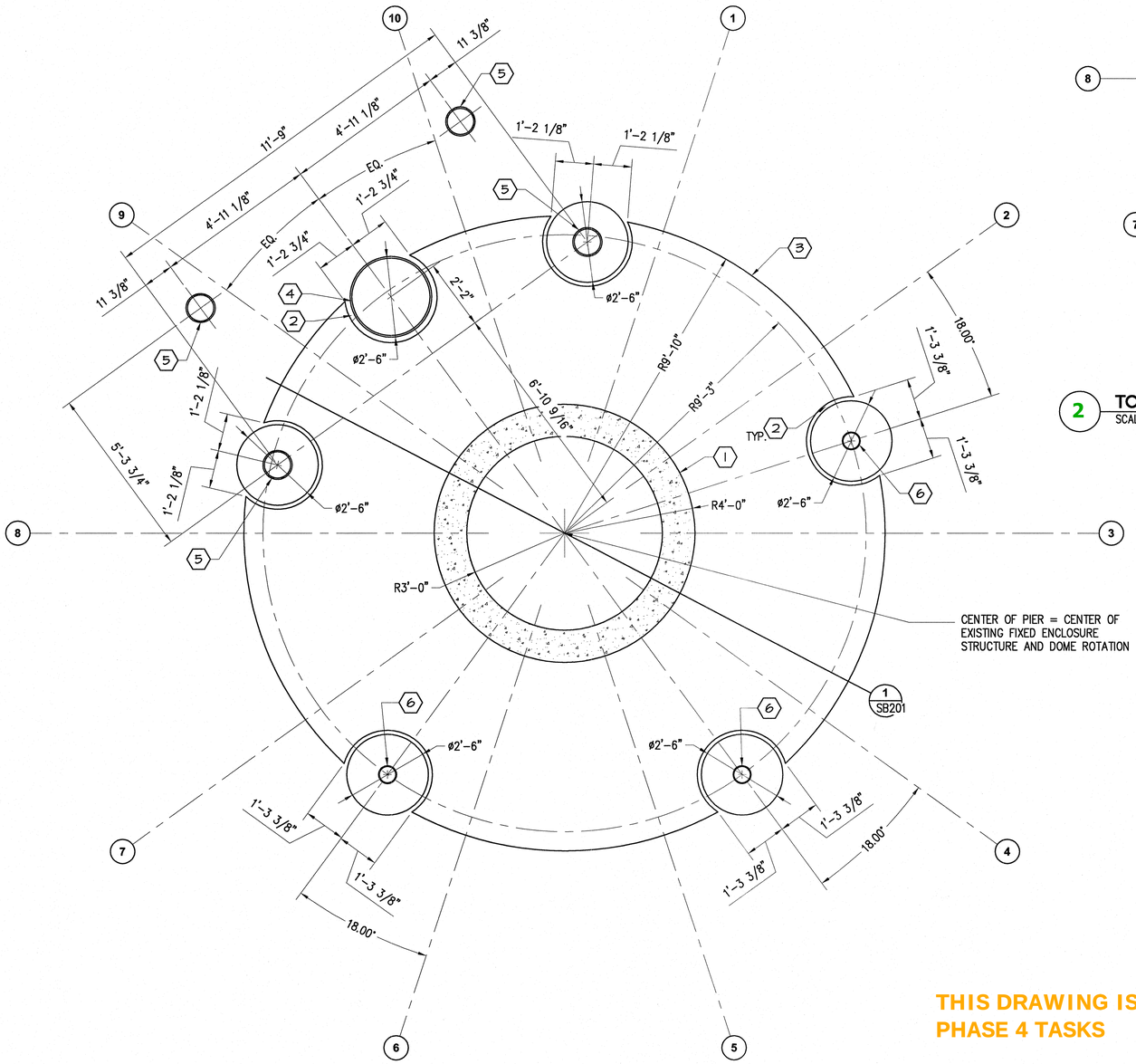


1 ENLARGED TELESCOPE PIER FOUNDATION AND COLUMN PLAN
SCALE: 1/2" = 1'-0"
NORTH

THIS DRAWING IS FOR REFERENCE ONLY. IT DESCRIBES NO PHASE 4 TASKS

## STRUCTURAL FOUNDATION PLAN KEY NOTES

1. PIER WALL - SEE 1/SB201 FOR REINFORCING.
2. 3" SEPARATION - FILL W/ STYROFOAM AT HYDRAULIC LIFT CASING.
3. PIER FOUNDATION - SEE 1/SB201 FOR REINFORCING.
4. HYDRAULIC LIFT CASING - SEE 6/SB501.
5. HYDRAULIC LIFT/MEZZANINE COLUMN (ABOVE).
6. MEZZANINE COLUMN (ABOVE).
7. PROVIDE (36) 1-1/2" DIA. ASTM F155A (GR 55) BOLTS CENTERED IN WALL THICKNESS. EMBED PER 1/SB201 AND PSTD-800-001.
8. 1 1/2" JOINT W/ 1/2" THICK DOW CORNING CORP. 888 SILICONE JOINT SEALANT OR EQUAL, TYP. AT CONCRETE COLUMNS AND STYROFOAM JOINTS.
9. INSTALL CONCRETE INSERTS FOR CABLE TRAY SUPPORTS AS DETAILED IN PSTD-800-001.

HARRY LEWSLEY
LICENSED PROFESSIONAL ENGINEER
No. 13615-S
HAWAII USA

THIS WORK WAS PREPARED BY ME OR UNDER MY SUPERVISION AND CONSTRUCTION OF THIS PROJECT WILL BE UNDER MY OBSERVATION.

Harry Lewsley 4/4/2011
SIGNATURE

4/30/2012
EXPIRATION DATE OF LICENSE

# Pan-STARRS PS2 Lure Modifications
# University of Hawaii
MAUI, HALEAKALA, HAWAII

(PHASE 4)


2051 W. SUNSET RD.
SUITE NO. 101
TUCSON, ARIZONA 85704
TEL: (520) 293-1488
FAX: (520) 293-8349
WWW.M3ENG.COM

ARCHITECTURE
ENGINEERING
CONSTRUCTION MANAGEMENT


**Revisions**

| | Description | Date |
|---|---|---|
| 1 | | |
| 2 | | |
| 3 | | |
| 4 | | |
| 5 | | |
| 6 | | |

Drawn: J.T.A.
Checked: H.J.L.
Issue Date: 04-04-11

Drawing Title
ENLARGED TELESCOPE PIER FOUNDATION PLAN

Sheet Number
SB401

M3PN 100064

Last Update: 3.8.2011

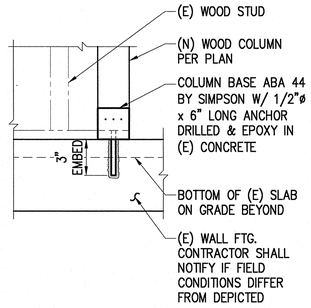


## NEW WOOD COLUMN @ (E) CONCRETE FOOTING

SCALE: 1 1/2"=1'-0"

1

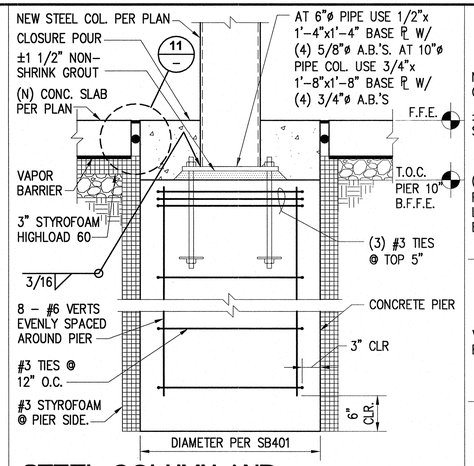


## STEEL COLUMN AND CONCRETE FOOTING

SCALE: 1"=1'-0"

2

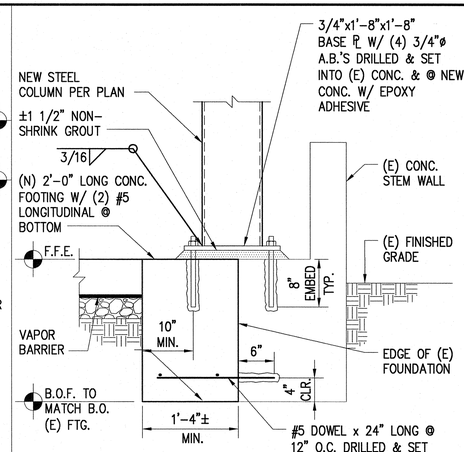


## FOOTING FOR LIFT COLUMN @ (E) CONCRETE

SCALE: 1"=1'-0"

3

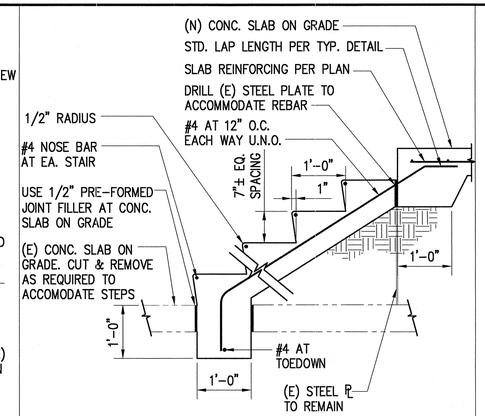


## CONCRETE STAIRS ON GRADE

SCALE: 3/4"=1'-0"

4

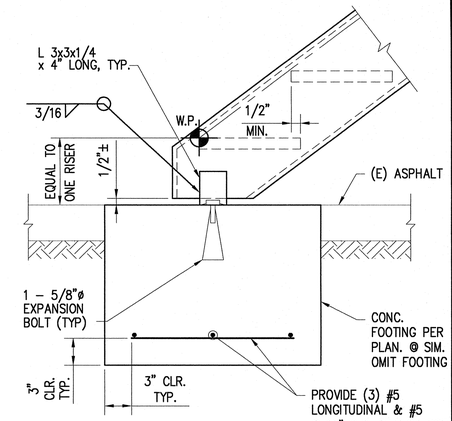


## STAIR STRINGER @ CONCRETE FOOTING

SCALE: 3"=1'-0"

5

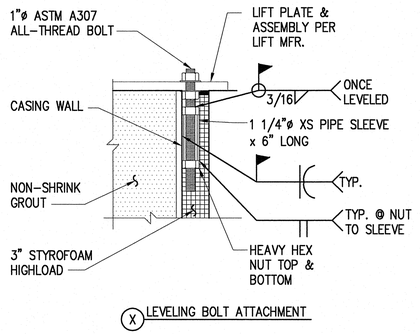


## HYDRAULIC LIFT CASING FOOTING

SCALE: 1/2"=1'-0"

6

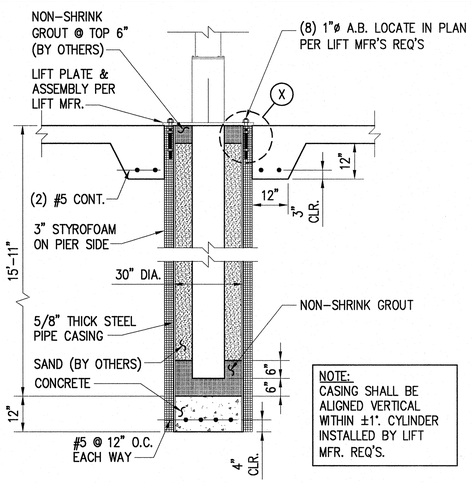


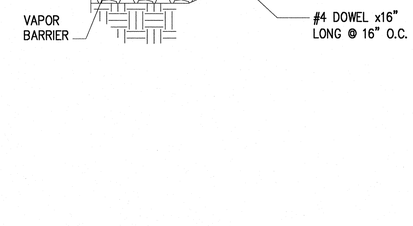


## NEW TO (E) CONCRETE SLAB

SCALE: 1 1/2"=1'-0"

7

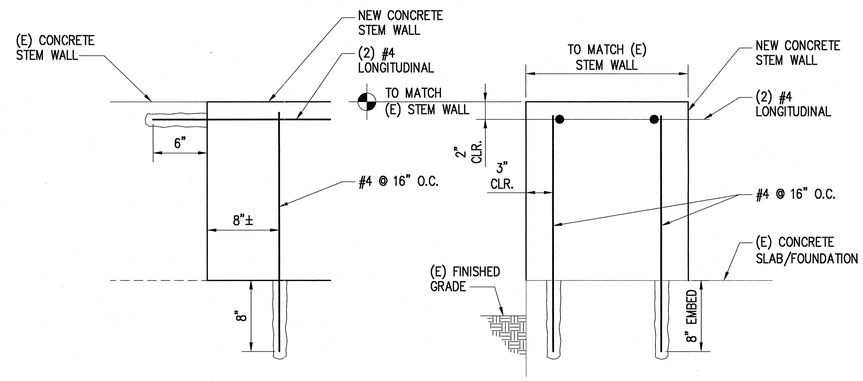


END CONDITION

TRANSVERSE SECTION

## NEW CONCRETE STEM WALL AT (E) FOUNDATION

SCALE: 1 1/2"=1'-0"

8

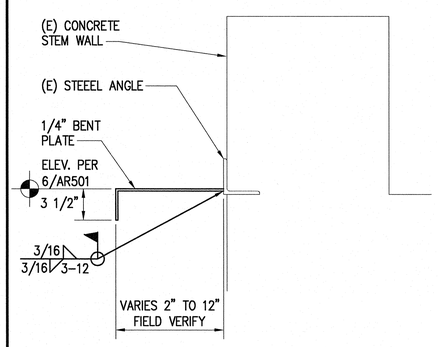


## SIDING BOTTOM BENT PLATE ATTACHMENT

SCALE: 1 1/2"=1'-0"

9

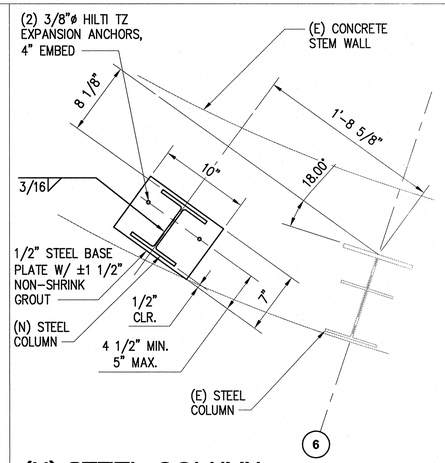


## (N) STEEL COLUMN AT (E) CONCRETE STEM WALL

SCALE: 1 1/2"=1'-0"

10

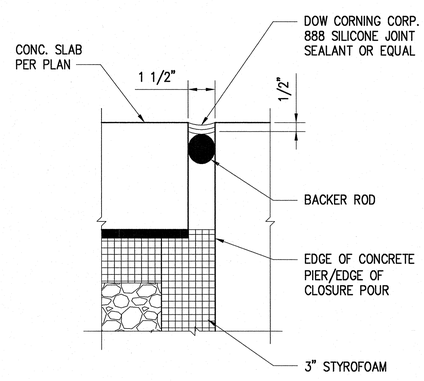


## JOINT @ EDGE OF CONCRETE

SCALE: 3"=1'-0"

11

**THIS DRAWING IS FOR REFERENCE ONLY. IT DESCRIBES NO PHASE 4 TASKS**

HARRY LEWSLEY
LICENSED PROFESSIONAL ENGINEER
No. 13615-S
HAWAII U.S.A.

THIS WORK WAS PREPARED BY ME OR UNDER MY SUPERVISION AND CONSTRUCTION OF THIS PROJECT WILL BE UNDER MY OBSERVATION.

Harry Lewsley 4/4/2011
SIGNATURE

4/30/2012
EXPIRATION DATE OF LICENSE

# Pan-STARRS PS2 Lure Modifications
## University of Hawaii
## (PHASE 4)

MAUI, HALEAKALA, HAWAII


2051 W. SUNSET RD.
SUITE NO. 101
TUCSON, ARIZONA 85704
TEL. (520) 293-1488
FAX (520) 293-8349
WWW.M3ENG.COM

ARCHITECTURE
ENGINEERING
CONSTRUCTION MANAGEMENT


### Revisions

| | Description | Date |
|---|---|---|
| 1 | | |
| 2 | | |
| 3 | | |
| 4 | | |
| 5 | | |
| 6 | | |

Drawn: J.T.A.
Checked: H.J.L.
Issue Date: 04-04-11

Drawing Title

**FOUNDATION DETAILS**

Sheet Number

**SB501**

M3PN 100064

Last Update: 3.14.2011

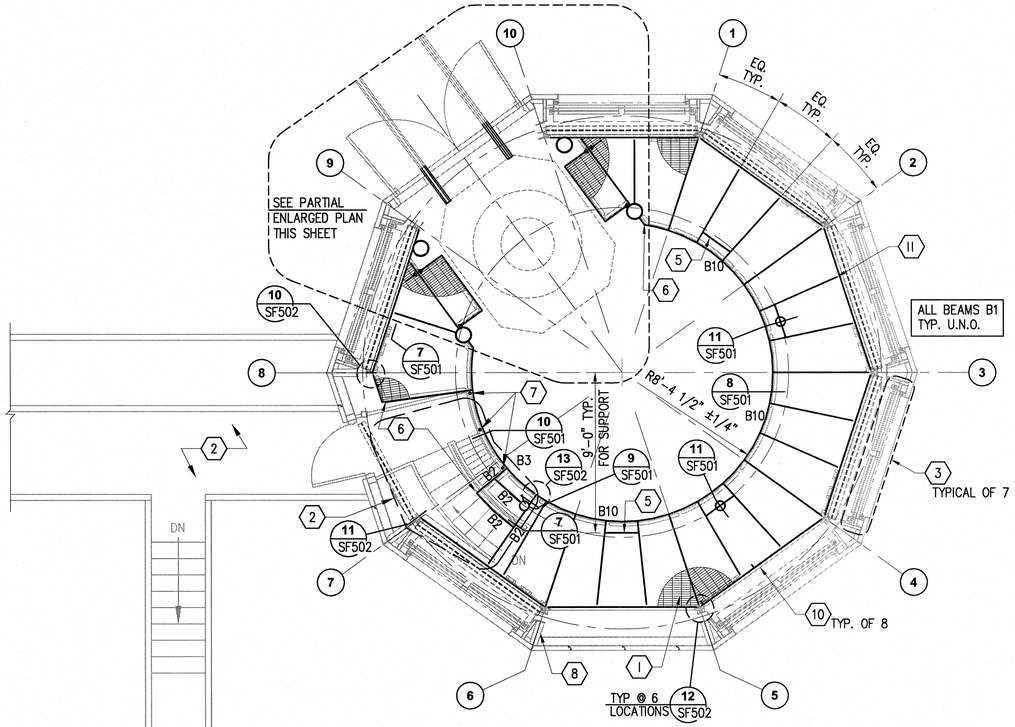


NOTE: TOP OF MEZZANINE FLOOR ELEVATION = 12'-5 1/2"

## MEZZANINE FRAMING PLAN

SCALE: 1/4" = 1'-0"

NORTH

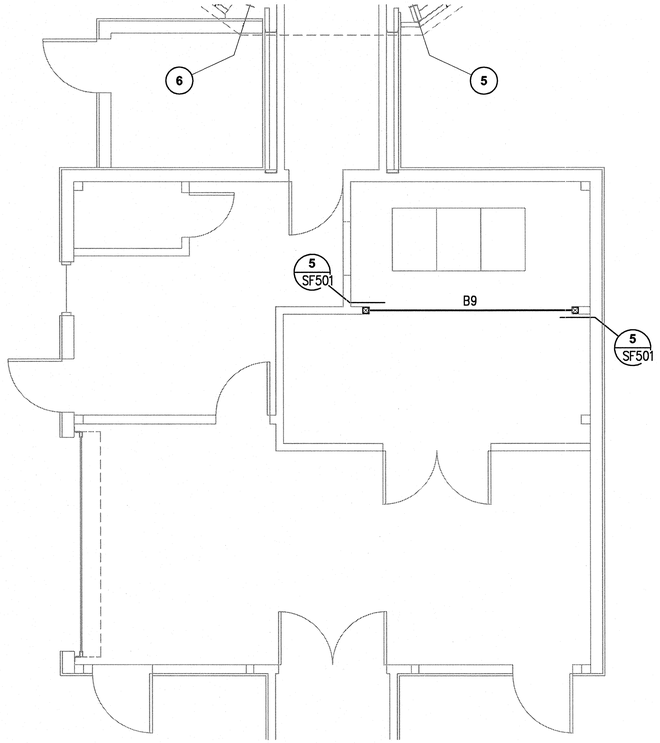


## NEW OPENING • COMPUTER ROOM

SCALE: 1/4" = 1'-0"

NORTH

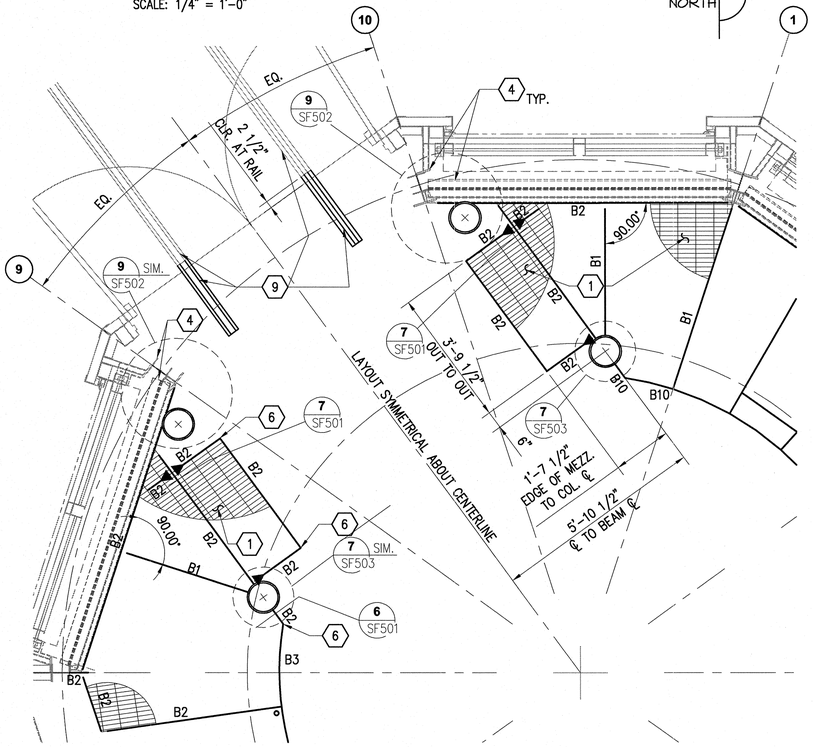


## ENLARGED PARTIAL MEZZANINE FRAMING PLAN

SCALE: 1/2" = 1'-0"

NORTH

## STRUCTURAL FRAMING PLAN KEY NOTES

1. BAR GRATING MEZZANINE FLOOR PER G.S.N. TYPICAL THROUGHOUT.
2. FOR STAIR AND PLATFORM FRAMING SEE SHEET SF401.
3. SEE DETAILS 1/SF501 & 13/SF501 FOR DAMPER FRAME ATTACHMENT.
4. EXISTING STEEL COLUMNS & BRACING TO REMAIN. SEE SF201 FOR FURTHER INFO.
5. BEAM FOR MECHANICAL UNIT SUPPORT. SUSPEND MECHANICAL UNITS FROM UNDERNEATH BEAMS ONLY.
6. MITER BEAMS & BUTT WELD ALL AROUND. SMOOTH WELDS TYP. @ HSS BEAM SPLICE.
7. 1 1/4" STANDARD PIPE COLUMN HANGER ATTACH TO BEAM PER 10/SF501.
8. SEE 12/SF501 FOR GIRT ATTACHMENT.
9. SEE SF202 FOR REMOVABLE & FIXED RAILS INFORMATION.
10. STEEL CHANNEL PER 6/SF502, BETWEEN GRIDLINES ⑩ TO ⑦ & ⑧ TO ⑨ (CLOCKWISE).
11. FOR BEAM TO BEAM CONNECTION SEE TYPICAL DETAIL 11/SJ501.

## BEAM SCHEDULE

| MARK | TYPE | REMARKS |
|---|---|---|
| B1 | W8X10 | – |
| B2 | HSS 6X4X1/4 | – |
| B3 | HSS 6X4X1/4 | ROLLED TO RADIUS +/- 1/4" |
| B4 | HSS 10X2X3/8 | LANDING/STAIR STRINGER. PROVIDE 1/4" CAP PL @ OPEN ENDS - SEE AR401 FOR RADIUS TO BE ROLLED TO, WHERE REQUIRED. |
| B5 | W10X22 | – |
| B6 | HSS 12X4X3/8 | LANDING/STAIR STRINGER. PROVIDE 1/4" CAP PL @ OPEN ENDS |
| B7 | HSS 4X4X3/16 | – |
| B8 | HSS 8X4X3/16 | – |
| B9 | 3 1/8"x12" GLB DF24F-V4 | WOOD/NO CAMBER |
| B10 | MC8X21.4 | ROLLED TO RADIUS +/- 1/4" |

HARRY LEWSLEY
LICENSED PROFESSIONAL ENGINEER
No. 13615-S
HAWAII USA

THIS WORK WAS PREPARED BY ME OR UNDER MY SUPERVISION AND CONSTRUCTION OF THIS PROJECT WILL BE UNDER MY OBSERVATION.

Harry Lewsley 4/4/2011
SIGNATURE

4/30/2012
EXPIRATION DATE OF LICENSE

# Pan-STARRS PS2 Lure Modifications
# University of Hawaii
## (PHASE 4)

MAUI, HALEAKALA, HAWAII


2051 W. SUNSET RD.
SUITE 101
TUCSON, ARIZONA 85704
TEL: (520) 293-1488
FAX: (520) 293-1489
WWW.M3PNS.COM

ARCHITECTURE
ENGINEERING
CONSTRUCTION MANAGEMENT


### Revisions

| Description | Date |
|---|---|
| 1 | |
| 2 | |
| 3 | |
| 4 | |
| 5 | |
| 6 | |

Drawn: J.T.A.
Checked: H.J.L.
Issue Date: 04–04–11

Drawing Title

**STRUCTURAL FRAMING PLAN**

Sheet Number

**SF101**

M3PN 100064

Last Update: 3.8.2011

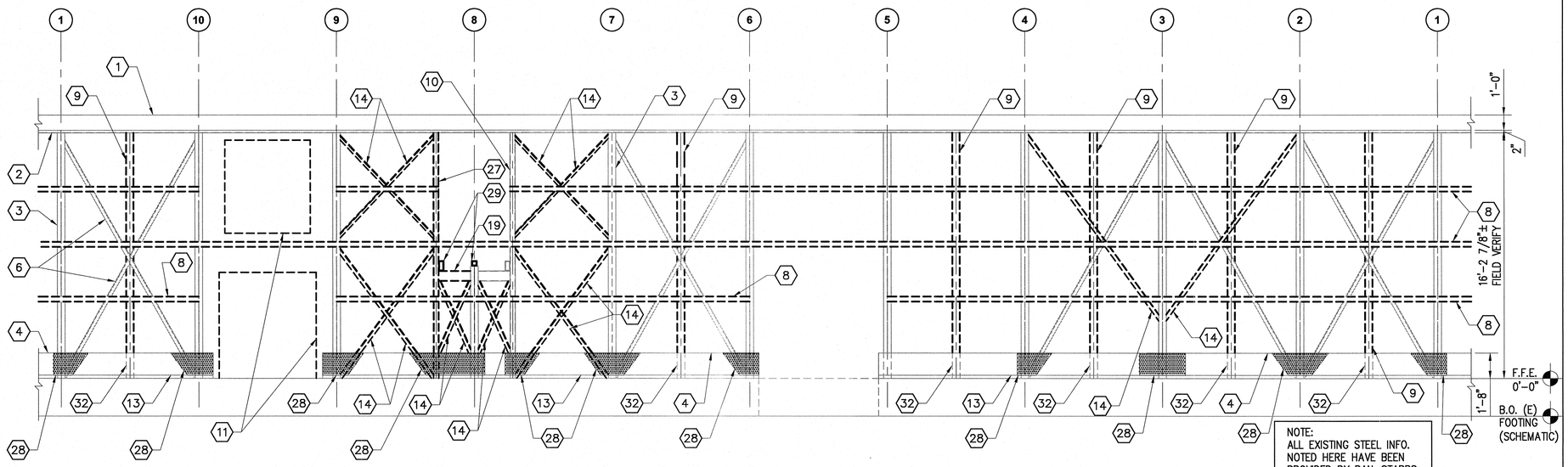


ENCLOSURE WALL FRAMING ELEVATION (VIEW FROM OUTSIDE) - EXISTING STEEL AND DEMOLITION WORK

SCALE: 1/4" = 1'-0"

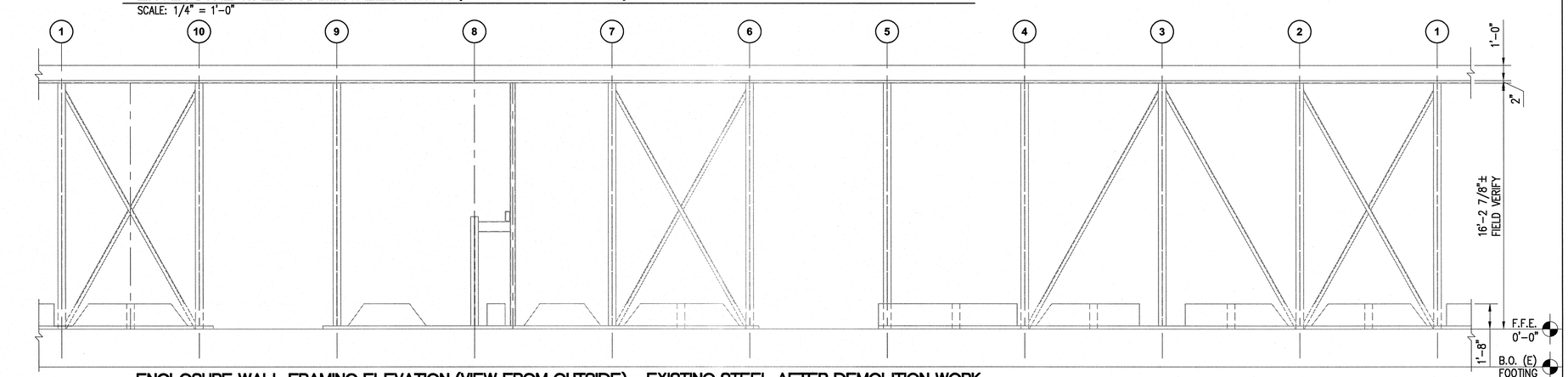


ENCLOSURE WALL FRAMING ELEVATION (VIEW FROM OUTSIDE) - EXISTING STEEL AFTER DEMOLITION WORK

SCALE: 1/4" = 1'-0"

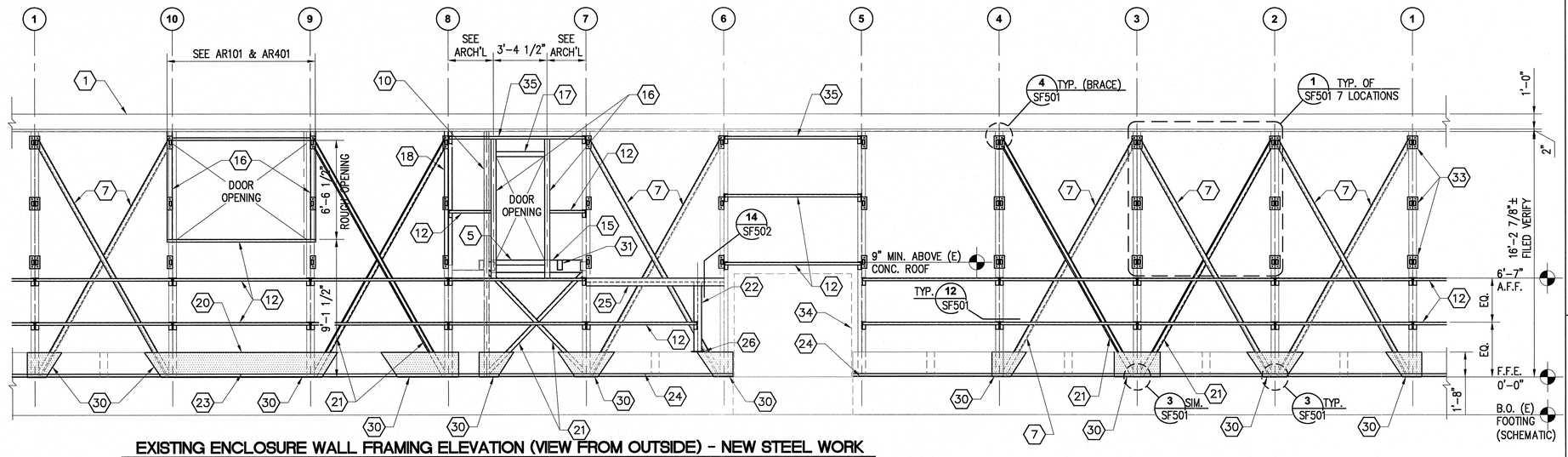


EXISTING ENCLOSURE WALL FRAMING ELEVATION (VIEW FROM OUTSIDE) - NEW STEEL WORK

SCALE: 1/4" = 1'-0"

## STRUCTURAL KEYNOTES

1. EXISTING H-350x350x12x19 RING BEAM TO REMAIN.
2. EXISTING STEEL CHANNEL TO REMAIN.
3. EXISTING H-150x150x6x6 STEEL COLUMN TO REMAIN, TYP. U.N.O.
4. EXISTING CONCRETE STEM WALL TO REMAIN.
5. L4x3x1/4 ATTACH TO HSS VERTICALS W/ 3/16" FILLET WELD ALL AROUND BOTH ENDS.
6. EXISTING L75x75x6 STEEL ANGLE BRACE TO REMAIN, TYP. U.N.O.
7. REINFORCE (E) BRACE W/ 3 1/2" XS PIPE PER DETAIL 2/SF501, TYP. TO ALL (E) BRACING.
8. EXISTING STEEL GIRT TO BE REMOVED.
9. EXISTING WIND COLUMN TO BE REMOVED.
10. EXISTING HSS4x4 COLUMN TO REMAIN.
11. REMOVE EXISTING DOOR FRAMING.
12. NEW C6x10.5 GIRT @ 4'-6" O.C. MAX. ATTACH TO COLUMN PER DETAIL 12/SF501.
13. EXISTING STEEL ANGLE TO REMAIN.
14. REMOVE EXISTING STEEL BRACING.
15. B5 SEE SF101 FOR BEAM SCHEDULE. T.O.B. = LANDING ELEVATION -1/4".
16. NEW HSS 4x6x3/16 COLUMN. FLUSHED W/ GIRT TO FRAME DOOR OPENING.
17. NEW HSS 4x6x3/16 BEAM (SLV).
18. NEW STEEL COLUMN TO MATCH EXISTING COLUMN BELOW. SPLICE W/ FULL PENETRATION WELD ALL AROUND.
19. REMOVE EXISTING BEAM ON NORTH SIDE OF GRID ⑧
20. PROVIDE CONCRETE STEM WALL TO MATCH (E) STEM WALL.
21. NEW STEEL ANGLE & PIPE BRACE PER 2/SF501 (SIM.).
22. NEW W6x20 COLUMN.
23. PROVIDE STEEL ANGLE TO MATCH (E) ANGLE.
24. 1/4" BENT PLATE TO BE WELDED TO (E) STEEL ANGLE. SEE 9/SB501 - TYPICAL AT ENTIRE BASE OF ENCLOSURE.
25. 26x20 GIRT @ THIS BAY, COPE FLANGE @ ENDS AS REQUIRED.
26. ATTACH COLUMN TO (E) STEM WALL PER 10/SB501.
27. EXISTING HSS4x4 COLUMN TO BE REMOVED.
28. REMOVE CONCRETE STEM WALL AROUND STEEL COLUMN AS REQUIRED FOR IMPROVEMENTS. DO NOT DAMAGE (E) STEEL COLUMN OR BRACES TO REMAIN.
29. CUT A PORTION OF (E) HSS8X4 & HSS4X4 @ END OF ENCLOSURE. SEE SF401 FOR EXTENT.
30. REPLACE CONCRETE IN KIND AFTER NEW BRACE & CONNECTION ARE INSTALLED, PER DETAIL 8/SB501.
31. B6. SEE SF101 FOR BEAM SCHEDULE.
32. STEEL COLUMN EMBEDDED INTO EXISTING CONCRETE STEM WALL IS TO REMAIN, CUT AS REQUIRED AT TOP OF STEM WALL.
33. DAMPER FRAME SUPPORT PER 13/SF501, TYP.
34. EDGE OF (E) CONTROL BUILDING CORRIDOR (SCHEMATIC).
35. TOP OF GIRT TO MATCH TOP OF ELEVATION OF DAMPER FRAME.

## GENERAL NOTES:

1. ALL DEMOLITION, REMOVAL OF EXISTING STEEL, ETC. SHALL BE NEAT. ADJACENT STEEL TO REMAIN SHALL NOT BE DAMAGED.
2. ALL EXISTING AND NEW STEEL SHALL BE PAINTED PER ARCHITECTURAL REQUIREMENTS.

**THIS DRAWING IS FOR REFERENCE ONLY. IT DESCRIBES NO PHASE 4 TASKS.**

HARRY LEWSLEY
LICENSED PROFESSIONAL ENGINEER
No. 13615-S
HAWAII U.S.A.

THIS WORK WAS PREPARED BY ME OR UNDER MY SUPERVISION AND CONSTRUCTION OF THIS PROJECT WILL BE UNDER MY OBSERVATION.

Harry Lewsley 4/4/2011
SIGNATURE

4/30/2012
EXPIRATION DATE OF LICENSE

# Pan-STARRS PS2 Lure Modifications
## University of Hawaii (PHASE 4)

MAUI, HALEAKALA, HAWAII


2051 W. SUNSET RD.
SUITE NO. 101
TUCSON, ARIZONA 85704
TEL. (520) 293-1488
FAX (520) 293-8349
WWW.M3ENG.COM

ARCHITECTURE
ENGINEERING
CONSTRUCTION MANAGEMENT


**Revisions**

| Description | Date |
|---|---|
| 1 | |
| 2 | |
| 3 | |
| 4 | |
| 5 | |
| 6 | |

Drawn: J.T.A.
Checked: H.J.L.
Issue Date: 04-04-11

Drawing Title

**ENCLOSURE WALL FRAMING ELEVATION**

Sheet Number

**SF201**

M3PN 100064

Last Update: 4.4.2011


File: P:\2010\100064\Structural\SF201.dwg LAST UPDATE: DEC 15, 2010 @ 1:22 PM BY: jg1682 LAST REV: PLOT SCALE: 1:1

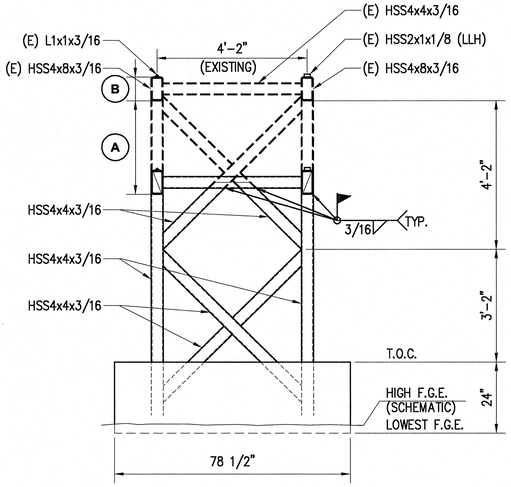


## SECTION A
SCALE: 1/2" = 1'-0"

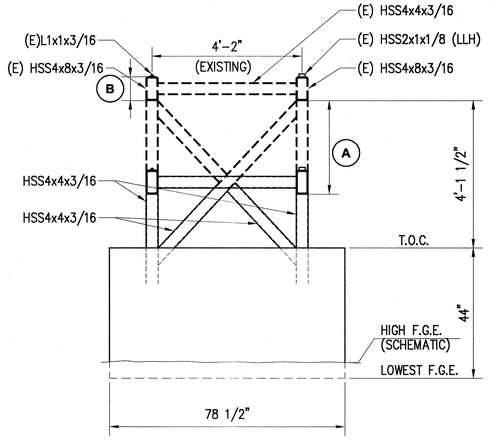


## SECTION B
SCALE: 1/2" = 1'-0"

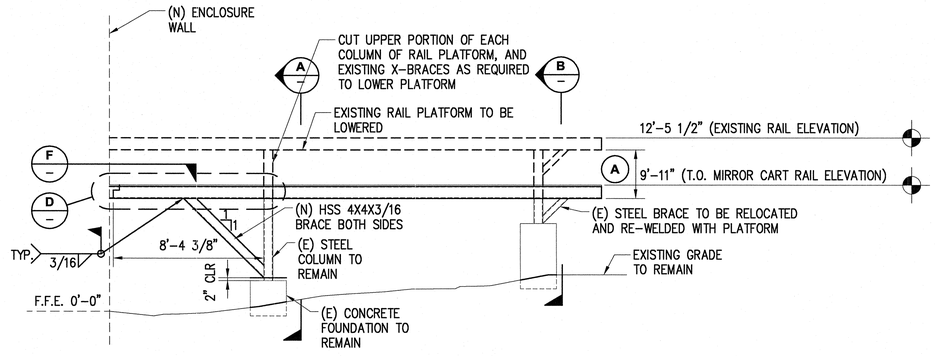


**NOTE: DURING CONSTRUCTION OPERATIONS, (E) CONCRETE FOUNDATION SHALL NOT BE DISTURBED.**

## MIRROR REMOVAL RAIL MODIFICATION - ELEVATION
SCALE: 1/4" = 1'-0"

(A) = **TUBE STEEL REGION TO BE REMOVED & DISCARDED**

(B) = **STEEL STRUCTURE TO BE RELOCATED**

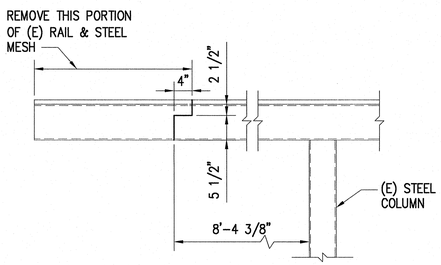


1 MODIFICATION TO (E) RAIL

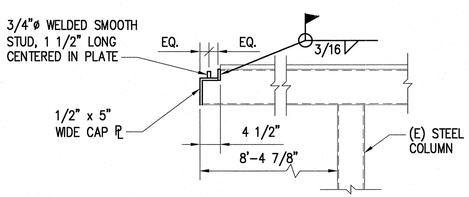


2 SUPPORTS FOR REMOVABLE RAIL

## MODIFICATION TO (E) FIXED RAIL BEAM FOR REMOVABLE RAIL SUPPORT
SCALE: 3/4" = 1'-0"

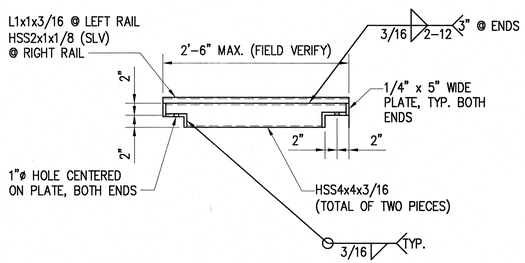


## REMOVABLE RAILS
SCALE: 1" = 1'-0"

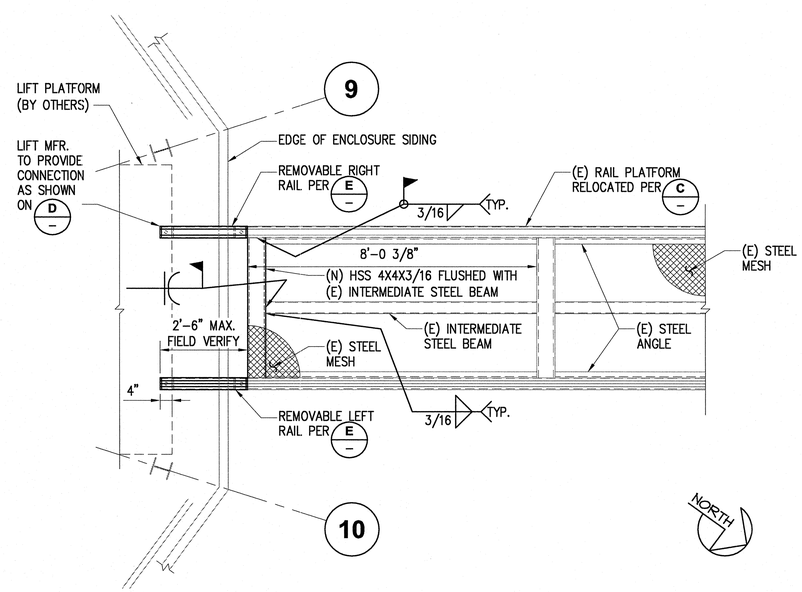


## MIRROR REMOVAL RAIL MODIFICATION AND REMOVABLE RAILS - PLAN
SCALE: 1/2" = 1'-0"

**THIS DRAWING IS FOR REFERENCE ONLY. IT DESCRIBES NO PHASE 4 TASKS.**

# Pan-STARRS PS2 Lure Modifications
University of Hawaii
MAUI, HALEAKALA, HAWAII
(PHASE 4)


2051 W. SUNSET RD.
SUITE NO. 101
TUCSON, ARIZONA 85704
TEL. (520) 293-1488
FAX (520) 293-8349
WWW.M3ENG.COM
ARCHITECTURE
ENGINEERING
CONSTRUCTION MANAGEMENT


## Revisions

| | Description | Date |
|---|---|---|
| 1 | | |
| 2 | | |
| 3 | | |
| 4 | | |
| 5 | | |
| 6 | | |

Drawn: J.T.A.
Checked: H.J.L.
Issue Date: 04-04-11

Drawing Title
**MIRROR REMOVAL RAIL MODIFICATION - ELEVATION**

Sheet Number
**SF202**

M3PN 100064

Last Update: 4.4.2011

HARRY LEWSLEY
LICENSED PROFESSIONAL ENGINEER
No. 13615-S
HAWAII USA

THIS WORK WAS PREPARED BY ME OR UNDER MY SUPERVISION AND CONSTRUCTION OF THIS PROJECT WILL BE UNDER MY OBSERVATION.

Harry Lewsley 4/4/2011
SIGNATURE

4/30/2012
EXPIRATION DATE OF LICENSE


File: P:\2010\100064\Structural\SF202.dwg LAST UPDATE: SEP 27, 2010 @ 4:04 PM BY: ja1682 LAST REV: PLOT SCALE: 1:1

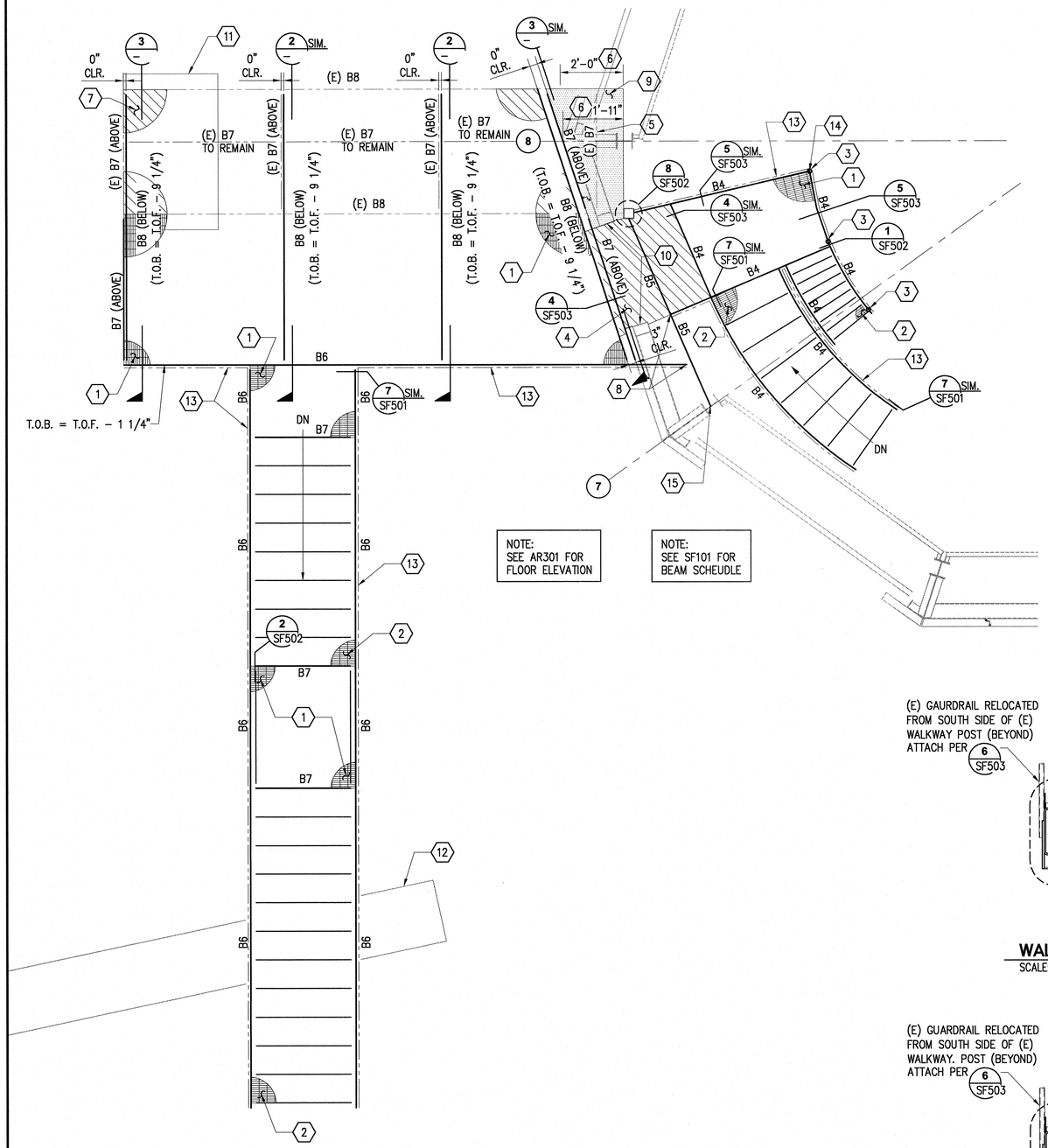


## 1 ENLARGED STAIR FRAMING PLAN
SCALE: 1/2" = 1'–0"

NORTH

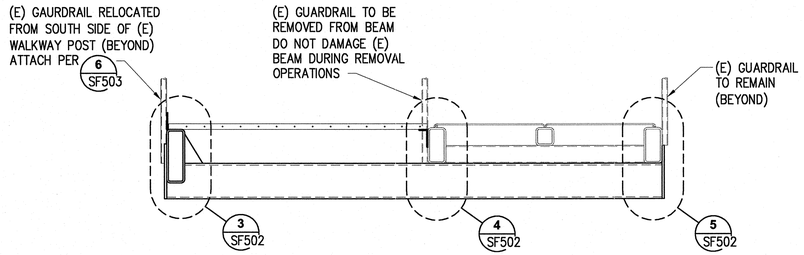


## WALKWAY SECTION 2
SCALE: 3/4" = 1'–0"

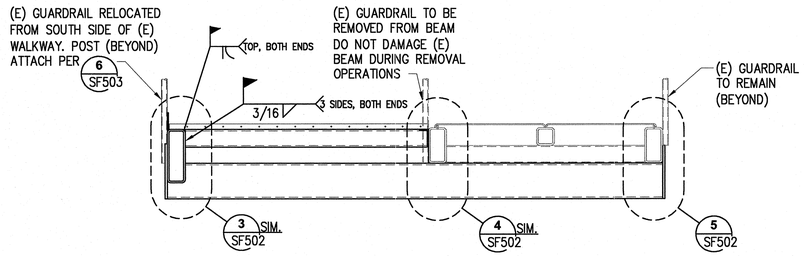


## WALKWAY SECTION 3
SCALE: 3/4" = 1'–0"

## STRUCTURAL FRAMING PLAN KEY NOTES

1. BAR GRATING PER G.S.N.
2. BAR GRATING TREADS PER TYPICAL DETAIL.
3. 1 1/4" STD PIPE HANGER COLUMN.
4. 1/4" THICK STEEL CHECKERED PLATE.
5. REMOVE (E) STEEL BEAM.
6. REMOVE THIS PORTION OF (E) STEEL BEAM.
7. (E) CHECKERED STEEL PLATE TO REMAIN.
8. CONNECT BEAM TO BEAM PER TYP. DETAIL 11/SJ501
9. (E) CHECKERED STEEL PLATE TO BE CUT & REMOVED TO PROVIDE 3" CLR. FROM NEW SIDING. (SEE AD101)
10. DOOR FRAMING PER SF201.
11. (E) CONCRETE FOOTING BELOW WALKWAY TO REMAIN (FOR REFERENCE ONLY, FIELD VERIFY LOCATION).
12. (E) WALL TO REMAIN.
13. STEEL GUARDRAIL PER 5/AR502 FOR EXTERIOR GUARDRAIL & PER 5/SF503 FOR INTERIOR GUARDRAIL.
14. MITER BEAMS & BUTT WELD ALL AROUND.
15. CONNECT BEAM TO COLUMN WEB W/ PLATE PER DETAIL 11A/SJ501 SIM.

**THIS DRAWING IS FOR REFERENCE ONLY. IT DESCRIBES NO PHASE 4 TASKS**

HARRY LEWSLEY
LICENSED PROFESSIONAL ENGINEER
No. 13615-S
HAWAII U.S.A.

THIS WORK WAS PREPARED BY ME OR UNDER MY SUPERVISION AND CONSTRUCTION OF THIS PROJECT WILL BE UNDER MY OBSERVATION.

SIGNATURE 4/4/2011

EXPIRATION DATE OF LICENSE 4/30/2012

# Pan-STARRS PS2 Lure Modifications
## University of Hawaii (PHASE 4)
MAUI, HALEAKALA, HAWAII


2051 W. SUNSET RD. SUITE NO. 101
TUCSON, ARIZONA 85704
TEL. (520) 293-1488
FAX (520) 293-8349
WWW.M3ENG.COM
ARCHITECTURE ENGINEERING CONSTRUCTION MANAGEMENT


**Revisions**

| | Description | Date |
|---|---|---|
| 1 | | |
| 2 | | |
| 3 | | |
| 4 | | |
| 5 | | |
| 6 | | |

Drawn: J.T.A.
Checked: H.J.L.
Issue Date: 04–04–11

Drawing Title
ENLARGED STAIR FRAMING PLAN

Sheet Number
SF401

M3PN 100064

Last Update: 3.8.2011


File: P:\2010\100064\Structural\SF401.dwg LAST UPDATE: DEC 03, 2010 @ 10:02 AM BY: jst682 LAST REV: PLOT SCALE: 1:1

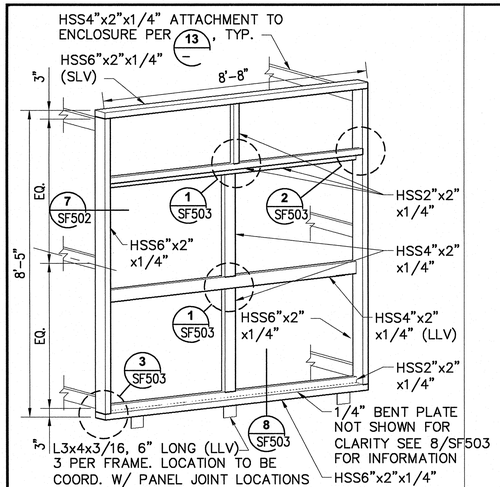


## DAMPER FRAME

SCALE: 1/2" = 1'-0"

1

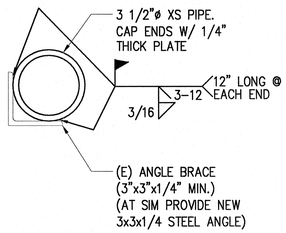


## (E) BRACE REINFORCING

SCALE: 3" = 1'-0"

2

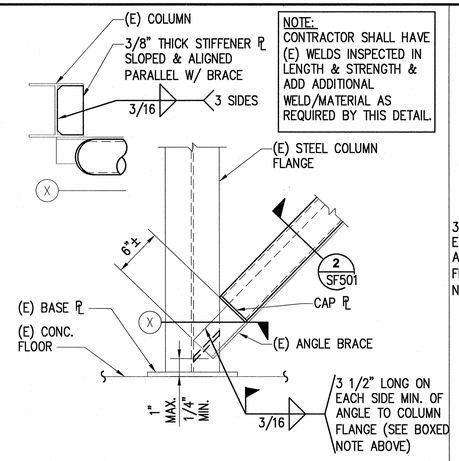


## (E) STEEL BRACE @ (E) STEEL COLUMN CONN. RETROFIT

SCALE: 1 1/2" = 1'-0"

3

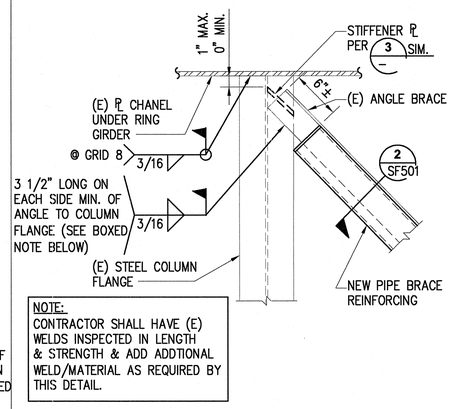


## (E) STEEL BRACE TO STEEL COLUMN RETROFIT

SCALE: 1 1/2" = 1'-0"

4

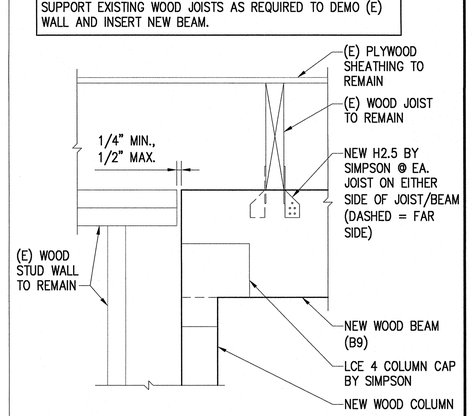


## NEW WOOD BEAM AND COL. UNDER (E) WOOD JOIST

SCALE: 1 1/2" = 1'-0"

5




## HSS STEEL BEAM TO STEEL COLUMN

SCALE: 3" = 1'-0"

6




## HSS BEAM TO HSS BEAM CONNECTION

SCALE: 3" = 1'-0"

7




## GUARDRAIL @ STEEL BEAM

SCALE: 3" = 1'-0"

8




## STEEL BEAMS AT STEELCOL.

SCALE: 3" = 1'-0"

9

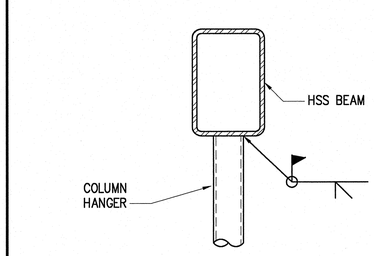


## COLUMN HANGER @ STEEL BEAM

SCALE: 3" = 1'-0"

10

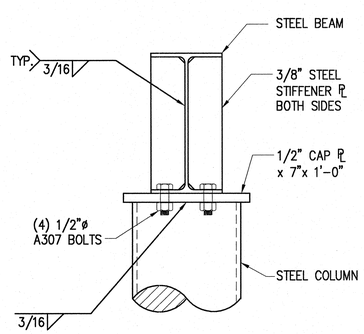


## STEEL BEAM AT STEEL COLUMN

SCALE: 3" = 1'-0"

11

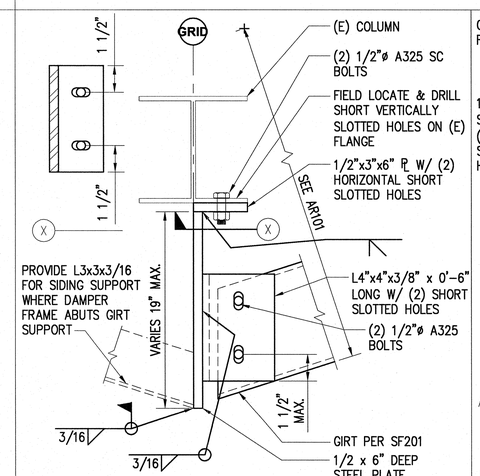


## GIRT SUPPORT @ (E) COLUMN

SCALE: 3" = 1'-0"

12

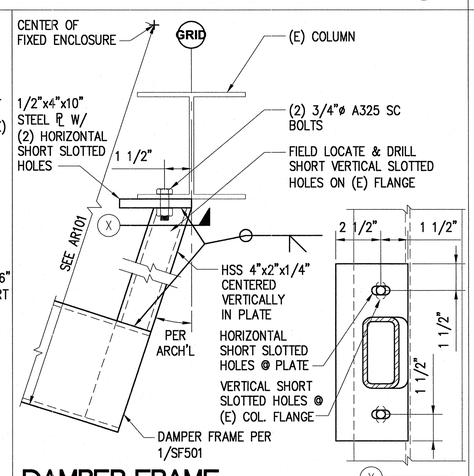


## DAMPER FRAME SUPPORT @ (E) COLUMN

SCALE: 3" = 1'-0"

13

THIS DRAWING IS FOR REFERENCE ONLY.
IT DESCRIBES NO PHASE 4 TASKS.

HARRY LEWSLEY
LICENSED PROFESSIONAL ENGINEER
No. 13615-S
HAWAII U.S.A.

THIS WORK WAS PREPARED BY ME OR UNDER MY SUPERVISION AND CONSTRUCTION OF THIS PROJECT WILL BE UNDER MY OBSERVATION.

SIGNATURE — 4/30/2012 EXPIRATION DATE OF LICENSE

# Pan-STARRS PS2 Lure Modifications
## University of Hawaii (PHASE 4)

HAWAII
MAUI, HALEAKALA,


2051 W. SUNSET RD. SUITE NO. 101
TUCSON, ARIZONA 85704
TEL (520) 293-1468
FAX (520) 293-8349
WWW.M3ENG.COM
ARCHITECTURE ENGINEERING CONSTRUCTION MANAGEMENT


### Revisions

| Description | Date |
|---|---|
| 1 | |
| 2 | |
| 3 | |
| 4 | |
| 5 | |
| 6 | |

Drawn: J.T.A.
Checked: H.J.L.
Issue Date: 04-04-11

Drawing Title

**STRUCTURAL FRAMING DETAILS**

Sheet Number

**SF501**

M3PN 100064

Last Update: 3.8.2011

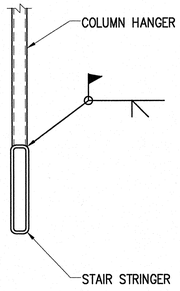


## COLUMN HANGER @ BEAM STRINGER

1

SCALE: 1 1/2" = 1'-0"

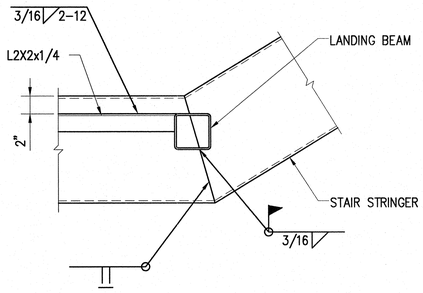


## BEAM TO BEAM

2

SCALE: 1 1/2" = 1'-0"

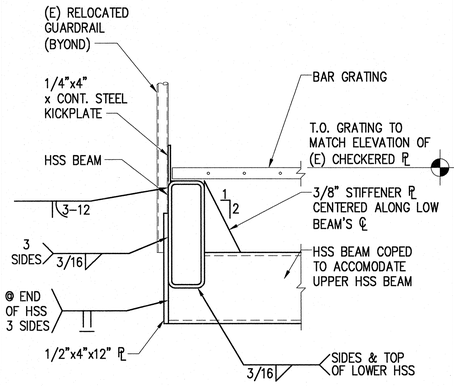


## BEAM TO BEAM

3

SCALE: 1 1/2" = 1'-0"

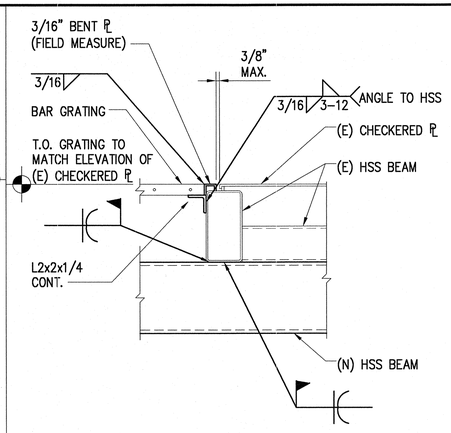


## BEAM TO BEAM

4

SCALE: 1 1/2" = 1'-0"

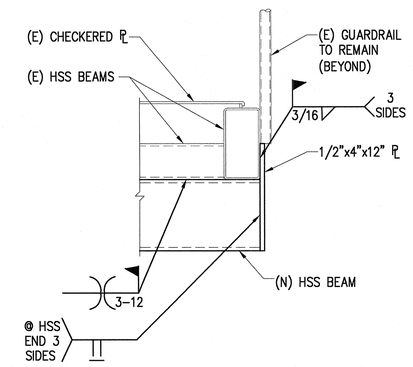


## BEAM TO BEAM

5

SCALE: 1 1/2" = 1'-0"

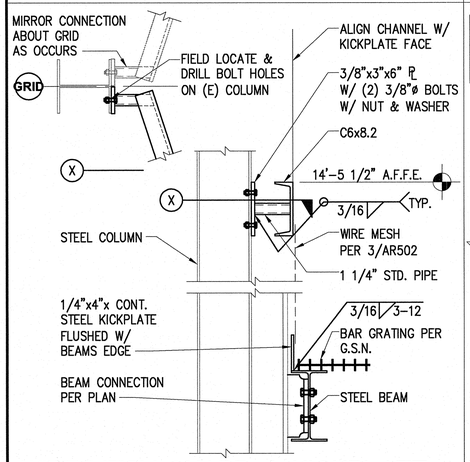


## WIRE MESH GUARD + KICKPLATE AT BEAM ATTACHMENT

6

SCALE: 1 1/2" = 1'-0"

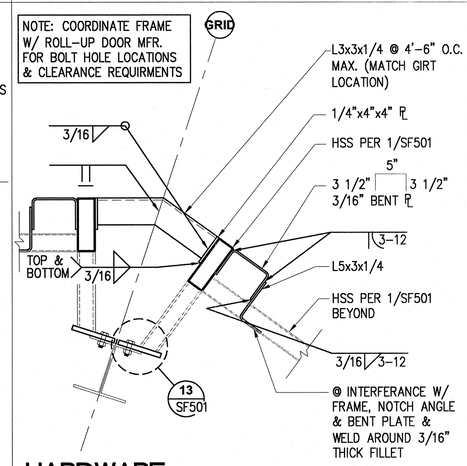


## HARDWARE RAILING AT DAMPER FRAME

7

SCALE: 1 1/2" = 1'-0"

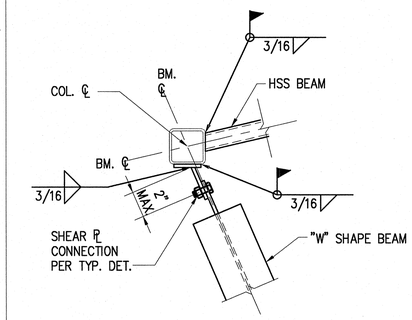


## (N) BEAMS TO (E) COLUMN

8

SCALE: 1 1/2" = 1'-0"

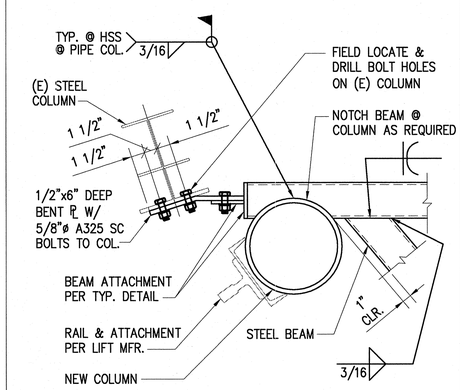


## HSS BEAM AT (E) COLUMN

9

SCALE: 1 1/2" = 1'-0"

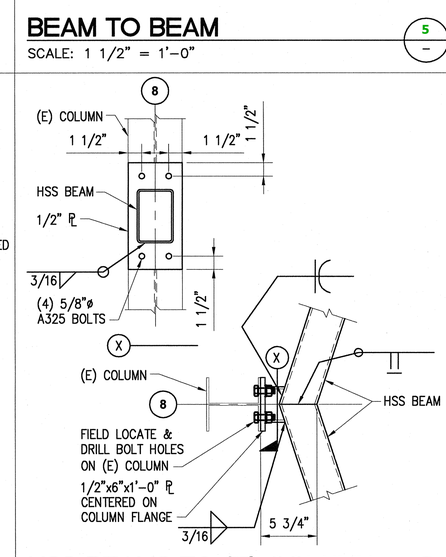


## HSS BEAMS TO (E) COLUMN

10

SCALE: 1 1/2" = 1'-0"

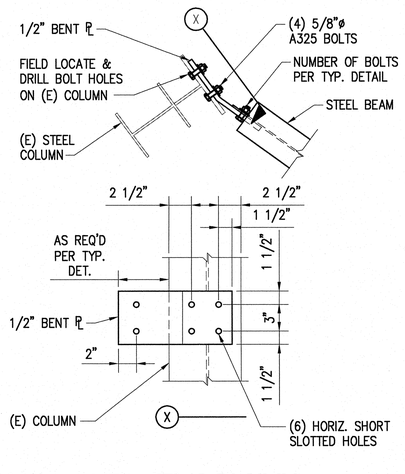


## (N) BEAM TO (E) COLUMN

11

SCALE: 1 1/2" = 1'-0"

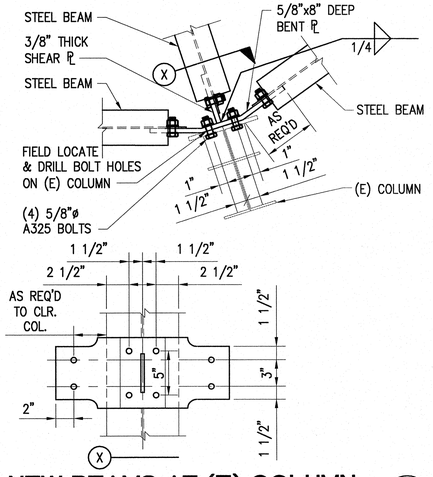


## NEW BEAMS AT (E) COLUMN

12

SCALE: 1 1/2" = 1'-0"

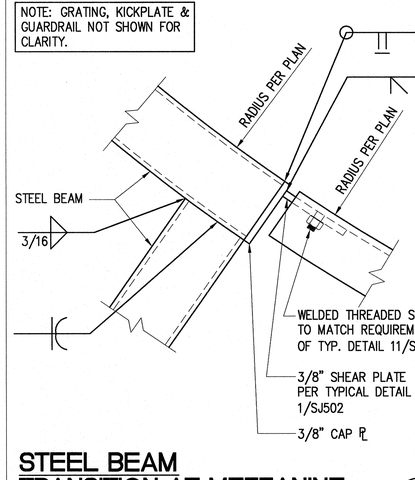


## STEEL BEAM TRANSITION AT MEZZANINE

13

SCALE: 3" = 1'-0"

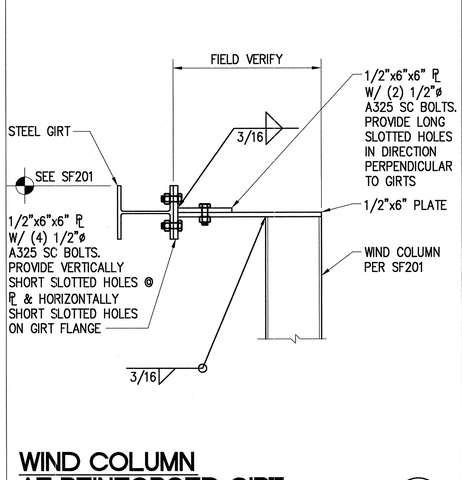


## WIND COLUMN AT REINFORCED GIRT

14

SCALE: 1 1/2" = 1'-0"

**THIS DRAWING IS FOR REFERENCE ONLY. IT DESCRIBES NO PHASE 4 TASKS.**

HARRY LEWSLEY
LICENSED PROFESSIONAL ENGINEER
No. 13615-S
HAWAII, U.S.A.

THIS WORK WAS PREPARED BY ME OR UNDER MY SUPERVISION AND CONSTRUCTION OF THIS PROJECT WILL BE UNDER MY OBSERVATION.

4/4/2011
SIGNATURE

4/30/2012
EXPIRATION DATE OF LICENSE

# Pan-STARRS PS2 Lure Modifications
## University of Hawaii
## (PHASE 4)

MAUI, HALEAKALA, HAWAII


2051 W. SUNSET RD.
SUITE NO. 101
TUCSON, ARIZONA 85704
TEL. (520) 293-1488
FAX (520) 293-3340
WWW.LAERNG.COM

ARCHITECTURE
ENGINEERING
CONSTRUCTION MANAGEMENT


### Revisions

| | Description | Date |
|---|---|---|
| 1 | | |
| 2 | | |
| 3 | | |
| 4 | | |
| 5 | | |
| 6 | | |

Drawn: J.T.A.
Checked: H.J.L.
Issue Date: 04-04-11

Drawing Title

**STRUCTURAL FRAMING DETAILS**

Sheet Number

**SF502**

M3PN 100064

Last Update: 3.14.2011


File: P:\2010\100064\Structural\SF502.dwg LAST UPDATE: DEC 27, 2010 @ 12:02 PM BY: jg1682 LAST REV: PLOT SCALE: 1:1

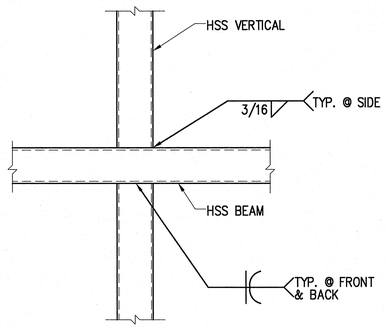


## HSS TO HSS

SCALE: 1 1/2" = 1'-0"

1 – 1

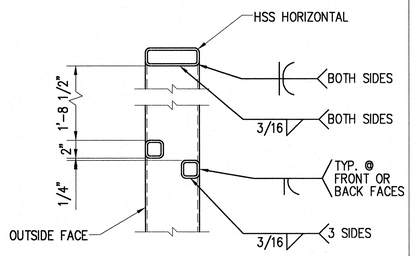


NOTE: OTHER PLATES & ANGLES HAVE BEEN OMITTED FOR CLARITY.

## HSS TO HSS

SCALE: 1 1/2" = 1'-0"

2 – 1

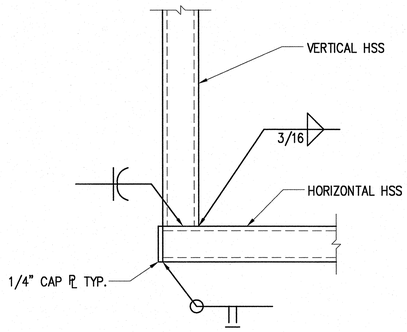


## DAMPER FRAME CORNER CONNECTION

SCALE: 3" = 1'-0"

3 – 1

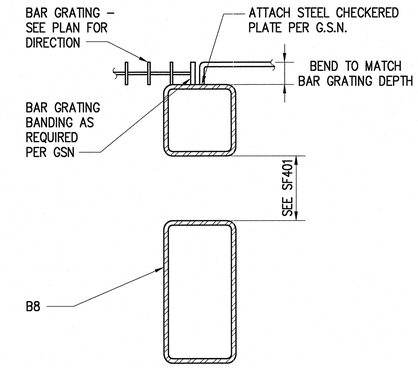


## BAR GRATING AND CHECKERED PL. AT (N) BEAM

SCALE: 3" = 1'-0"

4 – 1

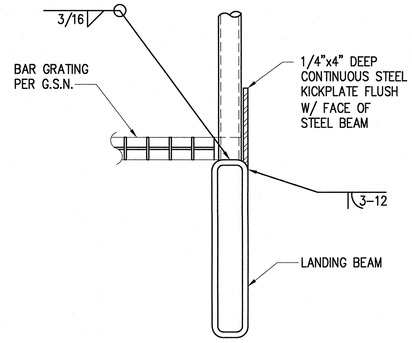


## BAR GRATING AND CHECKERED PL. AT (N) BEAM

SCALE: 3" = 1'-0"

5 – 1

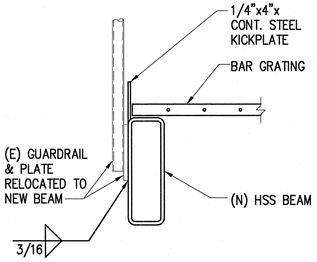


## (E) GUARDRAIL RELOCATION AT NEW BEAM

SCALE: 1 1/2" = 1'-0"

6 – 1

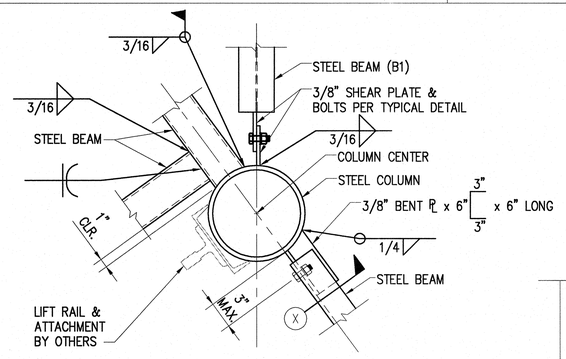


NOTE: GRATING, KICKPLATE & GUARDRAIL NOT SHOWN FOR CLARITY.

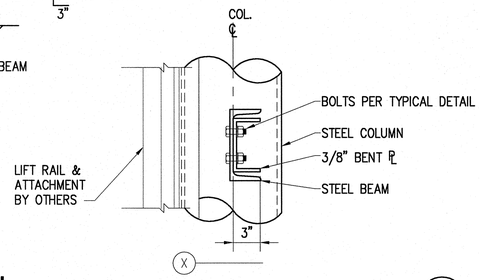


## STEEL BEAMS AT STEEL COLUMN

SCALE: 1 1/2" = 1'-0"

7 – 1

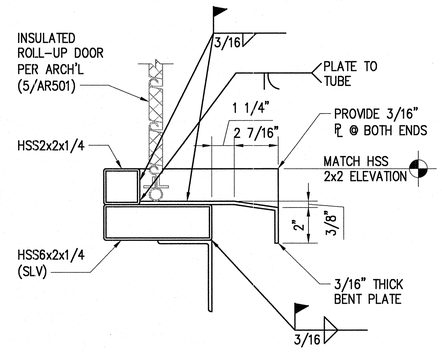


## BOTTOM ASSEMBLY OF DAMPER FRAME

SCALE: 3" = 1'-0"

8 – 1

THIS DRAWING IS FOR REFERENCE ONLY. IT DESCRIBES NO PHASE 4 TASKS.

HARRY LEWSLEY
LICENSED PROFESSIONAL ENGINEER
No. 13615-S
HAWAII U.S.A.

THIS WORK WAS PREPARED BY ME OR UNDER MY SUPERVISION AND CONSTRUCTION OF THIS PROJECT WILL BE UNDER MY OBSERVATION.

Harry Lewsley 4/4/2011
SIGNATURE

4/30/2012
EXPIRATION DATE OF LICENSE

# Pan-STARRS PS2 Lure Modifications
# University of Hawaii
## (PHASE 4)

MAUI, HALEAKALA, HAWAII


2051 W. SUNSET RD.
SUITE NO. 101
TUCSON, ARIZONA 85704
TEL. (520) 293-1488
FAX. (520) 293-8349
WWW.MSENG.COM

ARCHITECTURE ENGINEERING CONSTRUCTION MANAGEMENT


**Revisions**

| | Description | Date |
|---|---|---|
| 1 | | |
| 2 | | |
| 3 | | |
| 4 | | |
| 5 | | |
| 6 | | |

Drawn: J.T.A.
Checked: H.J.L.
Issue Date: 04-04-11

Drawing Title

**STRUCTURAL FRAMING DETAILS**

Sheet Number

**SF503**

M3PN 100064

Last Update: 4.4.2011


File: P:\2010\100064\Structural\SF503.dwg LAST UPDATE: DEC 21, 2010 @ 10:14 AM BY: jo1682 LAST REV: PLOT SCALE: 1:1

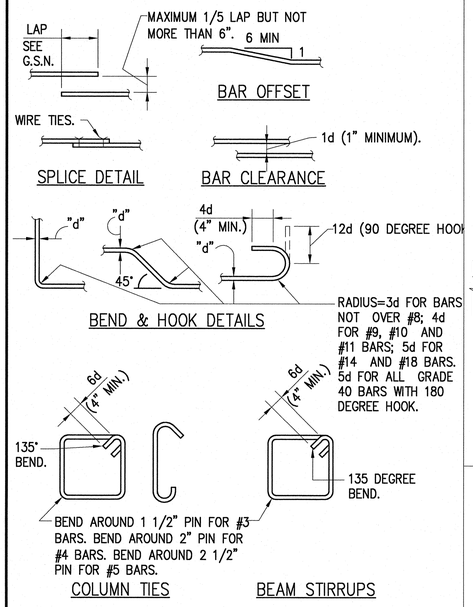


## TYP. CONC. REINF. BAR

SCALE: N.T.S.

1

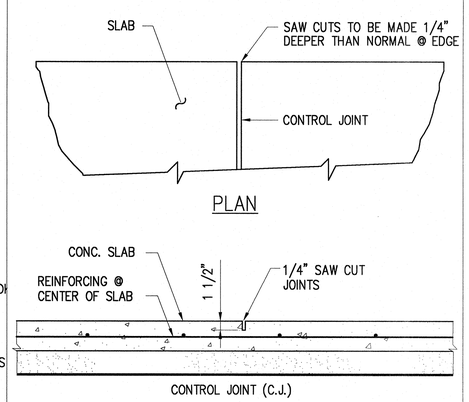


## CONSTRUCTION/ CONTROL SLAB JOINT

SCALE: N.T.S.

2

| EMBEDDED ANCHOR BOLT SCHEDULE | | |
|---|---|---|
| BOLT DIA., IN. | L (MIN.) | R, IN. |
| 5/8 | 0–10" | 1 1/2 |
| 3/4 | 1'–0" | 2 1/4 |
| 1 | 1'–10" | 3 |
| 1 1/2 | 4'–6" | 6 |

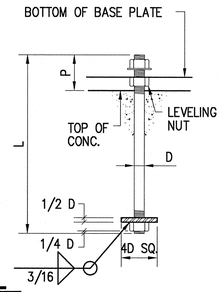


## TYPICAL ANCHOR BOLT SCHEDULE

SCALE: N.T.S.

3

| REINFORCING BAR SPLICE LENGTHS SCHEDULE | | | | | | |
|---|---|---|---|---|---|---|
| BAR SIZE | TENSION SPLICE LENGTH = 1.7 ld | | COMPRESSION SPLICE LENGTH | DEVELOPMENT LENGTH = ld | | COMPRESSION DEVELOPMENT LENGTH = ldc |
| | TOP BARS | OTHER BARS | | TOP BARS | OTHER BARS | |
| #4 | 4'–2" | 3'–2" | 1'–3" | 2'–5" | 1'–10" | 1'–3" |
| #5 | 5'–3" | 4'–0" | 1'–7" | 3'–1" | 2'–4" | 1'–7" |
| #6 | 6'–2" | 4'–9" | 1'–11" | 3'–7" | 2'–9" | 1'–11" |
| #7 | 9'–0" | 6'–10" | 2'–2" | 5'–3" | 4'–0" | 2'–2" |
| #8 | 10'–3" | 7'–10" | 2'–6" | 6'–0" | 4'–7" | 2'–6" |

A. FOR REINFORCEMENT SPACED 6" OR MORE, REDUCE LAP SPLICE LENGTHS TO 80% OF TENSION SPLICE LENGTH, BUT NOT LESS THAN 12"

B. ALL LAPS ARE TENSION SPLICES, UNLESS OTHERWISE NOTED ON THE DRAWINGS.

C. TOP BARS ARE ANY HORIZONTAL BARS PLACED SO THAT MORE THAN 12" OF FRESH CONCRETE IS CAST IN THE MEMBER BELOW THE REINFORCEMENT.

D. DEVELOPMENT LENGTH IS TO BE USED FOR CORNER BARS BEING EMBEDDED (END ANCHORAGE), BUT NOT SPLICED.

E. DEVELOPMENT LENGTH CAN BE MADE SHORTER THAN ABOVE TO AVOID HOOKING IF NECESSARY, DETAILER TO FLAG SUCH CONDITIONS ON SHOP DRAWINGS.

## MIN. REINF. BAR SPLICE LENGTHS IN CONCRETE

SCALE: N.T.S.

4

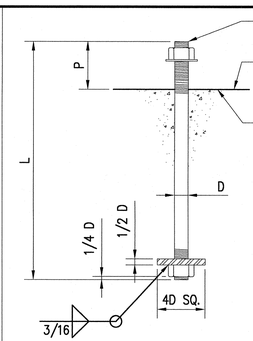


| EMBEDDED ANCHOR BOLT SCHEDULE | | |
|---|---|---|
| BOLT DIA., IN. | L (MIN.) | P, IN. (MIN.)⊛ |
| 5/8 | 1'–0" | 2 |
| 3/4 | 1'–8" | 2 1/2 |
| 1 | 1'–10" | 3 1/2 |

## EMBEDDED BOLT

SCALE: 1"=1'–0"

5

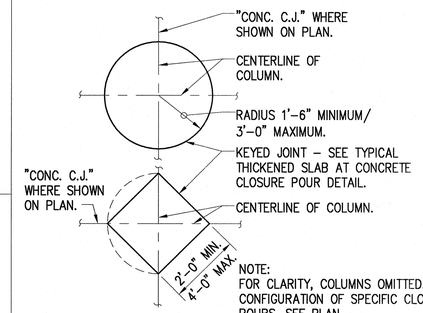


## TYP. COL. CLOSURE POUR @ CONC. SLAB ON GRADE

SCALE: 1/2"=1'–0"

6

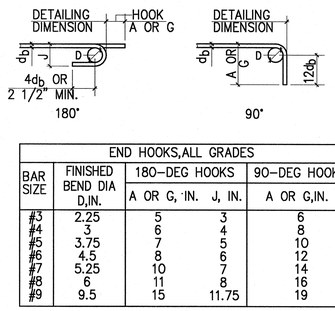


| END HOOKS,ALL GRADES | | | | |
|---|---|---|---|---|
| BAR SIZE | FINISHED BEND DIA D,IN. | 180–DEG HOOKS | | 90–DEG HOOKS |
| | | A OR G, IN. | J, IN. | A OR G,IN. |
| #3 | 2.25 | 5 | 3 | 6 |
| #4 | 3 | 6 | 4 | 8 |
| #5 | 3.75 | 7 | 5 | 10 |
| #6 | 4.5 | 8 | 6 | 12 |
| #7 | 5.25 | 10 | 7 | 14 |
| #8 | 6 | 11 | 8 | 16 |
| #9 | 9.5 | 15 | 11.75 | 19 |

## TYP. REINF. HOOK SCHEDULE

SCALE: 1 1/2"=1'–0"

7

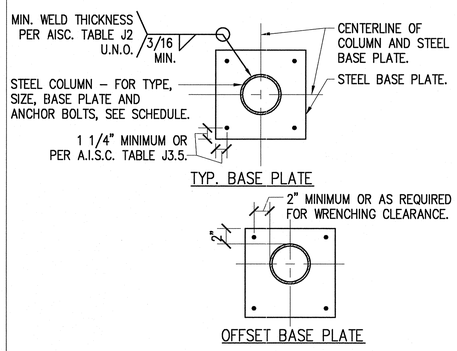


## TYP. STEEL COLUMN BASE PLATE

SCALE: N.T.S.

8

| NOMINAL BEAM DEPTH "D" | NUMBER OF 3/4"ø ASTM, A325 BOLTS |
|---|---|
| UP TO 7" | 2 |
| 8" – 11" | 2 |
| 12" – 14" | 3 |

FRAMING NOTES:

1. THE TYPICAL STEEL BEAM TO STEEL COLUMN OR STEEL BEAM TO STEEL BEAM CONNECTION CONSISTS OF 3/8" SINGLE SHEAR PLATES WITH 3/4" DIA. ASTM A325 BOLTS. USE 5/8" SHEAR PLATES WHERE "D" = 27" OR GREATER.
2. ALL BOLTS SHALL BE INSTALLED USING SHORT SLOTTED HOLES IN EITHER THE BEAM WEB OR THE SHEAR PLATE PER LATEST AISC SPECIFICATIONS.
3. CONNECTIONS REQUIRING DOUBLE ANGLES OR BENT PLATES WILL BE MARKED ON THE PLANS WITH AN ASTERISK (*). ALL DOUBLE ANGLES SHALL BE AS NOTED ON G.S.N.

## BOLT SCHEDULE FOR TYP. STEEL CONNECTIONS

SCALE: 3/4"=1'–0"

9

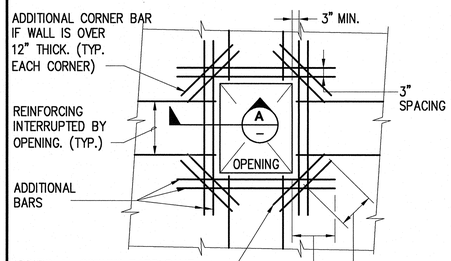


## TYPICAL WALL OPENINGS REINF.

SCALE: N.T.S.

10

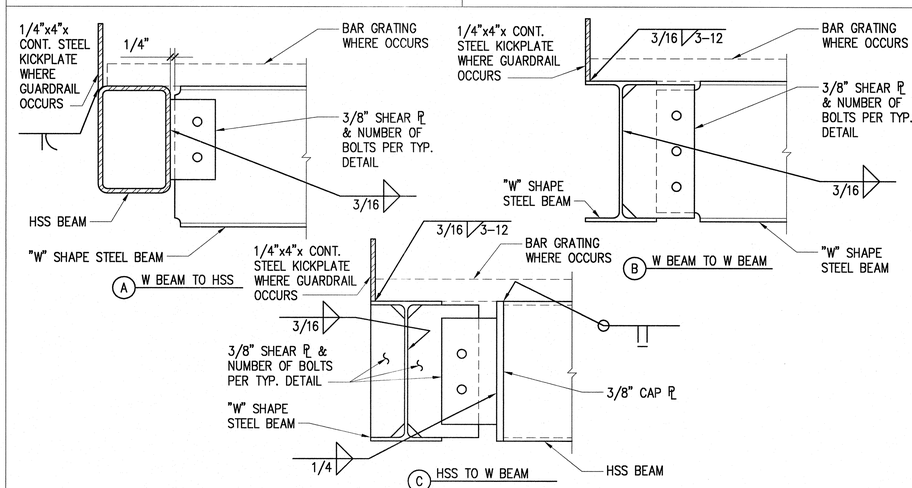


## STEEL BEAM TO STEEL BEAM

SCALE: 3" = 1'–0"

11

NOTE:
⊛ = REFERENCE 2/AR303 FOR EXTERIOR STAIRS & 1/AR401 FOR INTERIOR STAIRS.

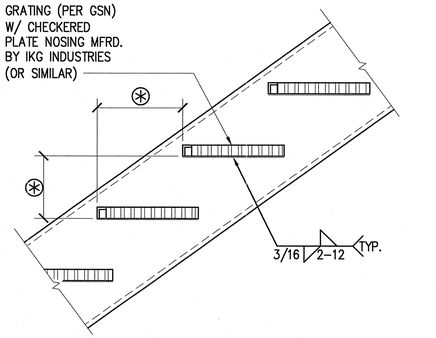


## TYPICAL STEEL BAR GRATING STAIR TREAD

SCALE: 1 1/2"=1'–0"

12

THIS DRAWING IS FOR REFERENCE ONLY.
IT DESCRIBES NO PHASE 4 TASKS

HARRY LEWSLEY
LICENSED PROFESSIONAL ENGINEER
No. 13615-S
HAWAII, USA

THIS WORK WAS PREPARED BY ME OR UNDER MY SUPERVISION AND CONSTRUCTION OF THIS PROJECT WILL BE UNDER MY OBSERVATION.

Harry Lewsley 4/4/2011
SIGNATURE

4/30/2012
EXPIRATION DATE OF LICENSE

# Pan-STARRS PS2 Lure Modifications
# University of Hawaii
## (PHASE 4)

HAWAII
MAUI, HALEAKALA.


2051 W. SUNSET RD.
SUITE NO. 101
TUCSON, ARIZONA 85704
TEL. (520) 293-1468
FAX. (520) 293-8349
WWW.M3ENG.COM
ARCHITECTURE
ENGINEERING
CONSTRUCTION MANAGEMENT


**Revisions**

| Description | Date |
|---|---|
| 1 | |
| 2 | |
| 3 | |
| 4 | |
| 5 | |
| 6 | |

Drawn: J.T.A.
Checked: H.J.L.
Issue Date: 04–04–11

Drawing Title

TYPICAL DETAILS

Sheet Number

SJ501

M3PN 100064

Last Update: 3.7.2011


File: P:\2010\100064\Structural\SJ501.dwg LAST UPDATE: DEC 28, 2010 @ 11:51 AM BY: jal682 LAST REV: PLOT SCALE: 1:1